Study of the temperature and humidity regime in solar drying of agricultural products

Gulom Ruzikulov[1,*], *Umidjon* Ibragimov[1], *Tulkun* Faiziev[1], *Sevara* Mirzayorova[1] and *Azim* Ruzikulov[2]

[1]Karshi engineering-economics institute, Karshi, 180100, Uzbekistan
[2]Karshi state university, Karshi, 180100, Uzbekistan

Abstract: This article presents the results of experiments on the temperature and humidity regimes in the drying chamber when drying apples and apricots in a refrigerator with a combined solar collector and heat pump. The combined dryer is designed for simultaneous drying and long-term storage of the product. Experiments on the study of temperature and humidity regimes were carried out under natural convection conditions. Experimental studies of temperature and humidity regimes showed that the maximum temperature inside the chamber reached 46 ºC and the maximum humidity reached 62%, and in these temperature and humidity regimes, apples were dried in 30 hours and apricots in 48 hours. From a product with a starting mass of 5 kg, 0.65-0.7 kg of dried product was obtained. Experimental results on temperature and humidity during drying of apples and apricots $t=f(h)$ and $w=f(h)$ and presented in the form of a dependency graph.

1 Introduction

The geographical location of the Republic of Uzbekistan is very convenient and rich in hydrocarbon and solar energy sources. Currently, the share of oil and gas (97%) in the structure of fuel and energy resources of Uzbekistan is significant, coal – 2.3%, hydropower – 0.7%, which means the need to develop alternative forms of electricity generation [1].

The total potential of renewable energy sources in Uzbekistan is 117987 million tons, and the technical potential is 179.3 million tons. The main share of this potential is solar energy, with a total capacity of 51 billion t.n.e. and a technical potential of 177 million t.n.e., ie the technical potential of solar energy is 98.7% of the technical potential of all renewable energy sources. The technical potential of solar energy is almost four times higher than the country's primary energy consumption. In this regard, Uzbekistan plans to increase the share of solar energy in the total energy balance of the country to 6% by 2030.

* Corresponding author: strong.shakhrier@mail.ru

At present, the large potential of solar energy is widely used in the drying of agricultural products (AP). AP is the total amount of products produced by the agricultural industry, ie livestock, fisheries, poultry, beekeeping, vegetables, melons and horticulture, over a period of time. AP is grown in certain seasons of the year, so special attention should be paid to the drying and storage of AP on farms in order to provide the population with food throughout the year. This is because it is impossible to solve the problem of providing the population with various products throughout the year without arranging for the drying and long-term storage of AP. In this regard, a number of measures are being taken in the country to develop fruit and vegetable growing, horticulture and viticulture, with sufficient attention paid to improving the processes of drying and storage and the creation of new technologies. This is due to the high energy consumption during the drying and storage of AP. Currently, the use of energy and resource-efficient drying and cooling systems in the drying and long-term storage of AP is one of the most important issues facing the agricultural economy.

2 Materials and methods

AP drying is the process of dehydrating a product by evaporating the water in it. Drying of AP is carried out in two ways, namely - natural - dehydration of products in the open air in the sun, and artificial - drying in special industrial dryers and solar dryers. Natural drying of AP is a classic method that has been used since ancient times. The most commonly dried products are apples, apricots, grapes, tomatoes, bell peppers, eggplant, melons, onions, etc. [2]. This traditional method of drying has several disadvantages compared to other drying devices [3]. In them, the products are contaminated with bacteria, and the drying rate is much lower due to low temperature and high humidity [4]. In addition, re-wetting of the product occurs when the product collides with cold air at night.

Technological devices for direct use of solar energy [5-8] and heat pumping system [9] have been proposed by the authors conducting research in the field of application of solar energy for drying AP.

Solar drying methods are divided into three groups according to the method of energy transfer required to dry the AP:

- Direct sun dryers: In these dryers, the product to be dried is placed inside a transparent surface or side panel housing. The required heat is generated by the absorption of solar energy in the product itself and on the inner surfaces of the chamber. This heat evaporates the moisture in the product being dried and promotes the natural circulation of the drying air.
- Indirect solar dryers: In these dryers, the air is first heated in a solar air heater and then transferred to a drying chamber.
- Mixed type solar dryers: the energy required for the drying process is provided by the solar energy falling directly on the drying material and the air energy heated by the solar air heater.

Singh [10] researched a small household solar dryer with natural convection. It mainly consists of a hot box, a base frame, shelves and shading plates. A window pane (4 mm thick) is installed as a transparent surface. It is fastened to the hot box using an aluminum angle. To ensure air circulation in the dryer, 40 holes with a total area of 0.002 m^2 were drilled in the top and sides of the dryer. A thermoelectric flat sheet with a thickness of 5 cm was used as an insulator.

Mursalim [11] proposed an improved solar box with natural convection. The dryer has only a transparent plastic coating and used wood chips as an insulating material. The walls

of the drying chambers are made of black painted plywood with dimensions 120×80×40 cm (length, width and height). There are 12 holes in the bottom for airflow.

Pangavhane [12] designed and developed a universal indirect solar dryer consisting of a natural convection solar air heater and a drying chamber. The solar air heater consists of a ribbed absorber (painted black), a transparent coating, insulation and a base. The air duct under the absorber is made of aluminum sheet, through which air flows. P-shaped corrugations (11) are placed on the absorber plate in a direction parallel to the air flow. The back of the absorber is fitted with aluminum ribs (0.15 mm thick matrix foil). The thickness at the lower end of the collector is 4 mm and the size to stop the flow of air at night 0.08×0.4 m. The air duct is sealed using quality sealing material. All devices are housed in a rectangular box made of galvanized metal sheet with a thickness of 0.9 mm. The space between the bottom of the air duct and the box is filled with a layer of fiberglass insulation. This system can be used to dry various APs, fruits and vegetables. It is also possible to dry grapes effectively in this solar dryer.

Jain [13] modeled the efficiency of a grain product multi-shelf drying system using an external accumulator inclined multi-way solar air heater. He came to the conclusion that the proposed mathematical model would be useful for evaluating the thermal characteristics of flat solar air heaters used for drying grain on multiple shelves. In addition, the model allows you to determine the amount of moisture, grain temperature and drying speed on different drying racks. He also concluded that the temperature of the grain increases as the length, width, and slope angle of the collector increase.

Mixed-type solar dryers consist of a separate solar collector and a drying block, both of which have a transparent coating, and the systems are connected in series with each other (figure 1). Solar energy is transferred to both the collector and the dryer at the same time. Solar energy passes through the transparent coating of the collector and heats the air heater absorber. The solar energy passing through the transparent coating of the drying chamber heats the product on the shelf and the moisture in the product evaporates. An increase in air temperature at the top of the product layer increases the air flow rate and the drying rate increases.

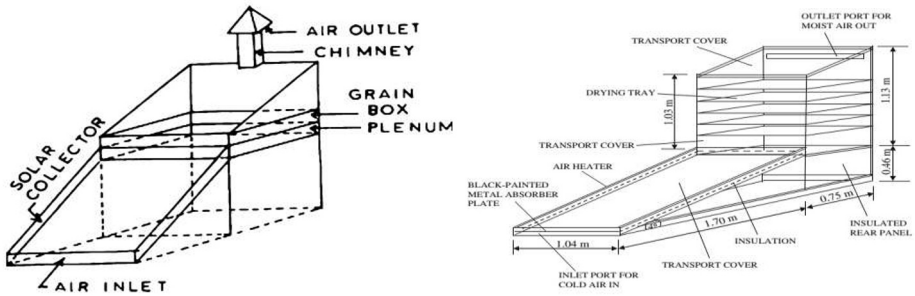

Fig. 1. Mixed type solar dryer.

Wibulswas and Niyomkarn [14] conducted an experimental study of a solar collector drying cabinet operating under natural convection conditions in Thailand. Dimensions of the drying cabinet shown in Figure 1. 1.04×0,75×1.03 m and consists of 5 shelves. At the top of the back of the cabinet there is an adjustable exhaust hole, which serves to expel humid air by natural convection. The dimensions of the solar air heater are as follows: width 1.04 m, length 1.8 m, angle of inclination to the horizon 14°. The collector used three types of transparent coating: glass, plastic and fibrous plastic. Experimental results have shown that a solar air heater with a metal sheet and glass coating gives the best results.

Based on the above analysis, an energy-efficient cooling and drying chamber based on combined solar and heat pumping devices was built at the heliopoligon of the “Alternative energy sources” training and research laboratory of the Karshi engineering-economics

institute. An overview of the drying chamber is shown in figure 2 and a schematic diagram is shown in figure 3.

Fig .2. Solar - heat pump cooling - drying chamber.

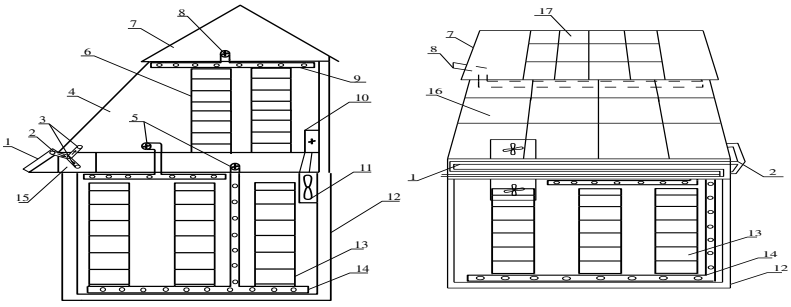

Fig. 3. Combined heat pump cooling-drying chamber scheme: 1-air heater collector; 2-air outlet from the air heater; 3-inlet of air into the accumulator and drying chamber; 4-drying chambers; 5-suction and spray fans from cooling chamber; 6-drying chamber seat; 6-roof of building; 8-indoor air intake fan; 9-air ducts; 10-heat pump condenser; 11-heat pump evaporator; 12-wall; 13-refrigeration chamber product sheet; 14-inner chamber of cooling chamber; 15-heat accumulator; 16-drying chamber glass cover; 17-solar photovoltaic panels.

The proposed combined cooling-drying chamber consists of a heat pump, passive and active solar heating systems, the bottom of the building is cooling, the top is a drying chamber. The volume of the drying chamber is 8 m^3, the volume of the cooling chamber is 5 m^3, which dries up to 3 tons of products at a time and allows cooling and storage of up to 2-2.5 tons of fruits and vegetables. The heat pump cools the cooling chamber at the same time, the heat received during cooling is transferred from the condenser part to the drying chamber. The rest of the heat capacity of the drying chamber is covered by the heat received in the passive and active solar devices. The parameters of the main temperature and humidity modes of the combined cooling-drying chamber are given in table 1.

Table 1. Temperature and humidity regimes of the cooling-drying chamber.

Temperature mode		**Humidity mode**	
Drying chamber, °C	50...60	Drying chamber, %	30-40
Cooling chamber, °C	-5...+10	Cooling chamber, %	90-95

The temperature and humidity regimes in the drying process of apples and apricots under natural convection in the drying chamber were studied experimentally. The initial and final condition of the product to be dried is shown in figure 4.

Fig. 4. Pre- and post-drying condition of apple and apricot products.

It is advisable to dry all varieties of apples, that is, more apples with more sugar and acid. Only ripe fruit is harvested for drying. Apples are cut and stored, apples are ripened during storage and remain suitable for drying. Shelf life of apples is 4-6 days for early varieties, 8-12 days for late varieties. Apples are divided into 3-4 varieties depending on size. Sorted apples are cleaned of various microorganisms, dust and mud in washing machines or baths with clean water. Apples are cut into flanges 0.7–1.0 cm thick. Peeled apples are immediately sliced and soaked in 2-3% brine. This helps to preserve its natural color. The apples are then placed on wooden trays and smoked with sulfur. Smoking lasts 30-35 minutes. The smoked trays are dried by placing them in a drying chamber. Depending on weather conditions, apples are dried for 3-6 days. 10-13% dry mass is obtained from apples. A dry mass with a moisture content not exceeding 20% is considered dried. The temperature of the building where the dried apples are stored should be 0-10 °C, relative humidity 60-65%.

Apricots are stored after harvest, ripe apricots are stored for 12 hours, apricots with 2-3 days before ripening are stored for 58-72 hours. Fruits are divided into 3–4 varieties, depending on size. Dried apricots are cleaned of dust and mud. Fruits treated with toxins are then rinsed in a 1.0% hydrochloric acid solution, then rinsed again in clean water and smoked. Smoked apricots retain their natural color and are resistant to insects. One kilogram of fruit is smoked for 2-1.5 hours, consuming 2-2.5 grams of sulfur. Drying of apricots takes a total of 8-10 days, depending on the temperature regime. Drying is completed when the fruit dries flat and the skin is inseparable. If the moisture content of 75-80% of dried apricots is 15-17%, it will be completely dried. Dried apricots are stored in a clean warehouse with a temperature of 0–10°C and a relative humidity of 60–65%.

3 Results and discussion

Experimental studies of temperature and humidity regimes of the drying chamber were carried out on the basis of drying apples and apricots. The drying process was carried out during the operation of the drying chamber under natural convection conditions. When drying the apple, the initial mass of the apple was 5 kg, the humidity was 65%, the post-drying mass was 0.65-0.7 kg and the humidity was 20%. Drying time 3 days. When drying apricots, the initial mass of apricots was 5 kg, humidity was 65%, post-drying mass was 0.7-0.75 kg and humidity was 20%. Drying time 5 days. Changes in temperature and humidity in the drying chamber $t=f(h)$ and $w=f(h)$ shown in the form of a dependency graph.

Figures 5 and 6 show the results of time-varying changes in outside air and air temperatures inside the drying chamber during apple and apricot drying (experiments were conducted on 19-23.05.2022).

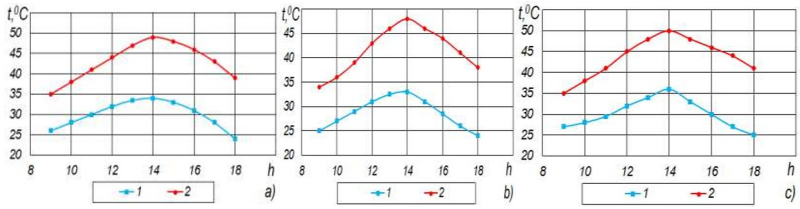

Fig. 5. Changes in the outside air and air temperature in the drying chamber during the drying process of apples: a-19.05.2022; b-20.05.2022; c-21.05.2022; 1 outside air temperature; 2. Air temperature inside the drying chamber.

An analysis of the experimental results shown in figures 5 and 6 shows that when the drying chamber operates under natural convection conditions, the outside air temperature and the intensity of solar radiation have a significant effect on the air temperature inside the drying chamber.

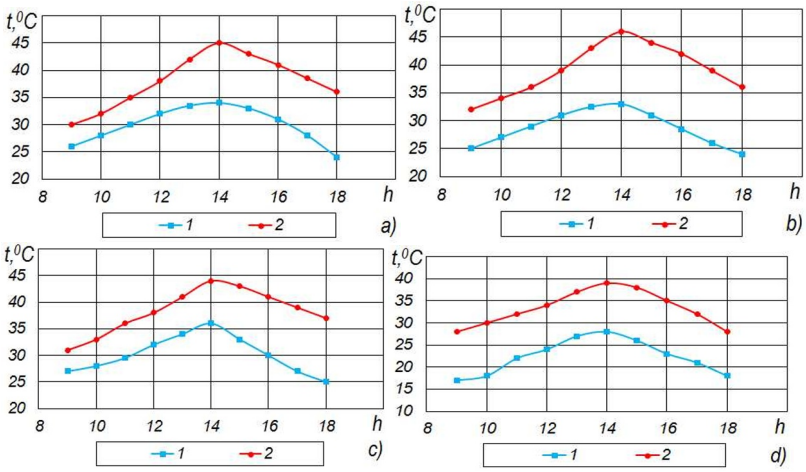

Fig. 6. Changes in the outside air and air temperature in the drying chamber during the drying of apricots: a-19.05.2022; b-20.05.2022; c-21.05.2022; d-22.05.2022, 1 outside air temperature; 2 air temperature inside the drying chamber.

An analysis of the experimental results shown in figures 5 and 6 shows that when the drying chamber operates under natural convection conditions, the outside air temperature and the intensity of solar radiation have a significant effect on the air temperature inside the drying chamber. As the temperature of the outside air increases, so does the temperature of the air inside the drying chamber. An increase in air temperature inside the drying chamber increases the moisture content of the product. Under natural convection conditions, the temperature inside the chamber reaches 46 holda depending on the maximum outside air temperature.

Figures 6 and 7 show the results of an experiment conducted to study the humidity of the air inside the drying chamber and the moisture content of the product during the drying of apple and apricot products.

An analysis of the experimental results shown in figures 6 and 7 shows that the humidity of the air inside and outside the chamber has a significant effect on the reduction of product humidity when the drying chamber is operated under natural convection conditions. Decreasing the humidity of the outside air significantly reduces the humidity of

the air inside the chamber, which leads to the rapid separation of free moisture in the product. Apples are more porous than apricots, the moisture content of this product is much faster and the drying time of the product is reduced to 1.5-2 times compared to natural drying.

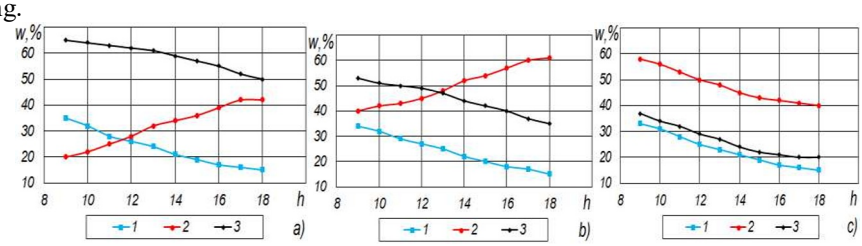

Fig.7. Changes in outside air, air in the drying chamber and moisture in the material during the drying process of apples: a-19.05.2022; b-20.05.2022; c-21.05.2022; 1-outdoor humidity; 2- humidity inside the drying chamber; 3-material moisture.

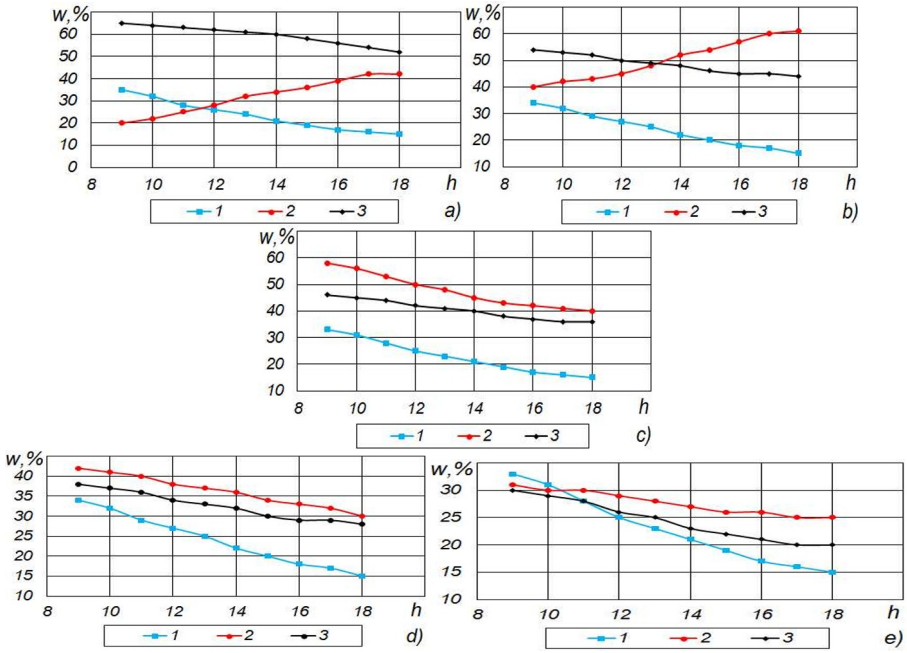

Fig. 8. Changes in outside air, air in the drying chamber and moisture in the material during the drying of apricots: a-19.05.2022; b-20.05.2022; c-21.05.2022; d-22.05.2022 e; e-23.05.2022 y; 1- outdoor humidity; 2-humidity inside the drying chamber; 3- material moisture.4.

4 Conclusions

As a result of world research on natural convection solar dryers and analysis of the design of solar dryers, a solar-dryer-cooling device was built. The following conclusions were drawn from the study of temperature and humidity regimes in the drying of apple and apricot products in the experimental device:

A dry-refrigeration unit with a combined solar collector and heat pump was built, samples of apple and apricot products brought for drying and their drying technology were presented.

Experiments on drying apple products have shown that 30 hours (compared to daytime) were sufficient to dry apples when the drying chamber was operating under natural convection. At the same time, apples with a mass of 5 kg and an initial moisture content of 65% had a dry weight of 0.65 kg and a final moisture content of 20%. The maximum temperature inside the chamber was 46 °C and the maximum humidity was up to 62%. The time taken to dry the apples was reduced to 1.5-2 times compared to natural drying in the open air.

Experiments on drying apricots showed that 48 hours (compared to daytime) were sufficient to dry apricots when the drying chamber was operating under natural convection. At the same time, apricots with a mass of 5 kg and an initial moisture content of 65%, when dried, had a dry mass of 0.7 kg and a final moisture content of 20%. The maximum temperature inside the chamber was 46 °C and the maximum humidity was up to 62%. The time taken to dry apricots was reduced by 1.2-1.3 times compared to natural drying in the open air.

References

1. Saidov A.X. Use of ecologically clean and renewable solar energy in Uzbekistan. *Molodoy uchenyy* **20(310)** 687-689 (2020)
2. Bennamoun L.A. Belhamri Numerical simulation of drying under variable external conditions: Application to solar drying of seedless grapes. *Journal of Food Engineering* **76** 179-187 (2003)
3. Gbaha P. Experimental investigation of a solar dryer with natural convective heat flow. *Renewable Energy* **32** 1817-1829 (2007)
4. Sacilik L, Keskin R. and Elicin A. Mathematical modeling of solar tunnel drying of thin layer organic tomato. *Journal of Food Engineering* **73(3)** 231-238 (2006)
5. Schislenko D.M. and Bastron A.V. Mobilnaya geliosushilnaya ustanovka dlya sushki plodov yagodnyx kultur. *Vestnik KrasGAU* **6** 131-135 (2018)
6. Khamraev S.I., Ibragimov U.Kh. and Kamolov B.I. Removal of hydrodynamic lesions of a heated floor with a solar collector. *IOP Conf. Series: Earth and Environmental Science* **1070 (2022)**
7. Uzakov G.N., Charvinski V.L., Ibragimov U.Kh., Khamraev S.I and Kamolov B.I. Mathematical Modeling of the Combined Heat Supply System of a Solar House. *Energetika Proc. CIS Higher Educ. Inst. and Power Eng. Assoc.* **65(5)** 412-421 (2022)
8. Uzakov G.N., Khamraev S.I. and Khuzhakulov S.M. Rural house heat supply system based on solar energy. *IOP Conf. Series: Materials Science and Engineering* **1030** (2021)
9. Lalit M.Bal, Satya Santosh and Naik S.N. Solar dryer with thermal energy storage systems for drying agricultural food products. *Sustainable Energy Review* **14** 2298-2314 (2010)
10. Singh P.P., Singh S. and Dhaliwal S.S. Multi-shelf domestic solar dryer. *Energy Conversion & Management* **47** 1799–1815 (2006)
11. Mursalim Supratomo and Dewi Y S Drying of cashew nut in shell using solar dryer. *Science & Technology* **3(2)** 25–33 (2002)
12. Pangavhane D., Sawheny R.L. and Sarsavadia P.N. Design, development and performance testing of a new natural convection solar dryer. *Energy* **27** 579–590 (2002)
13. Jain D. Modeling the system performance of multi-tray crop drying using an inclined multi-pass solar air heater with in-built thermal storage. *Journal of Food Engineering*

71 44–54(2005)

14. Wibulswas P. and Niyomkarn L. Development of solar air heaters for a cabinet-type solar dryer. *In: Proceeding of workshop on solar drying* Manila Philippines (1980)
15. Lukyanova M., Kovshov V., Zalilova Z., Faizov N. Modeling the Expansion of Agricultural Markets. *Montenegrin Journal of Economics* **18(2)**, 127–141 (2022)
16. Salimova G., Ableeva A., Lubova T., Zalilova Z., Sharafutdinov A. The Role of Agriculture in Gross Added Value. *Montenegrin Journal of Economics* **16(1)**, 183–191 (2020)
17. Ermakova A.M., Demina K.A., Nurullina T.S. Resource-saving technologies - The basis of effective enterprise activity. *IOP Conference Series: Earth and Environmental Science* **723(4)** 042027 (2021)