Optimization of multifunctional powing unit parameters

Nikolai Malashikhin[1], *Elena* Yudina[1]*, *Sergey* Papusha[1] and *Michael* Kadyrov[1]

[1]Federal State Budgetary Educational Institution of Higher Education "Kuban State Agrarian University named after I.T. Trubilin", 13, Kalinina st., Krasnodar, 350044, Russia

Abstract. Technology of soil moldboard plowing with a reversible plow with the simultaneous the main mineral fertilizer application, as well as additional crumbling of plowed layer and leveling the field surface, is substantiated. Using the modeling of operation process of complex plowing unit, its optimal parameters and operating modes are substantiated. Feature of the structural and technological scheme of the proposed unit is the use of reversible high-speed plow PSK with a reinforced frame structure, with a low energy intensity of the plowing process due to the elimination of plow land-sides, with devices for crumbling furrow slice and leveling field surface with simultaneous mineral fertilizer application. Incorporation and application of fertilizers into the soil without a break in time improves operation quality and reduces costs. Block diagram of algorithm for optimizing parameters and modes of proposed multifunctional plowing unit operation is presented and dependence of tractor engine power on its mass is approximated. Mathematical model and algorithm for optimizing the parameters and modes of complex unit operation have been developed, using as an optimization criterion, the minimum value of total energy consumption for the performance of operation process with a working speed limit of up to 15 km/h, plow working width of up to 6 m, plow specific resistance coefficient of up to 80 kN/m2, plowing depth of up to 0.3 m, fertilizer hopper capacity up to 4 m3, furrow length of up to 2 km. The K-701 tractor has been adopted as a power unit. At the minimum value of the optimization criterion, the following parameters have been substantiated: plow width, working speed, fuel consumption, performance, power unit tractive effort, traction power, fertilizer hopper capacity. Dependences of optimization criterion on the unit parameters and modes of its operation have been obtained.

Introduction.

Technology of agricultural crop cultivation [1-2], technical level of machines [3-4] and the organization of equipment effective exploitation [5-6] determine competitiveness of manufactured products. Quantity and quality of harvest depend on strict adherence to technology and quality of machines.

* Corresponding author: elena_yudina1963@mail.ru

Farming system in the Krasnodar Krai [7], when cultivating grain crops in a crop rotation, recommends reversible moldboard plows after spiked crops. Prior to plowing, main mineral fertilizer application is necessarily carried out, followed by its subsequent plowing. Disadvantage of this technology is that the fertilizer application requires special spreader and additional tractor for aggregating the spreader. All this reduces performance, increases costs and energy intensity. By offered multifunctional plowing unit (MPU), mineral fertilizers are applied simultaneously while plowing, using spreader frontally installed on the front of tractor attachment, adjusted to a given application rate and reversible plow width. Combination of these operations in one pass of unit across the field, helps reduce soil compaction and its structure damaging. Next advantage of proposed MPU is that a special device in form of a roller is attached to reversible plow for additional crumbling and leveling of soil. Attachable roller for bursting, compacting the topsoil and leveling surface of plowed field also helps maintain soil fertility, frees up one tractor to hitch the rollers and lower costs.

Materials and methods.

One of effective ways to improve agricultural machinery is the modeling and optimization of production processes [10]. They make it possible to find the optimal solution to improve the designs of obsolete machinery with less labor intensity. Purpose of the article is to optimize workflow of complex plowing unit to increase its performance and reduce energy consumption. Modern plowing is the most labor-intensive process in the field crop cultivation system, however, new designs of PSK plows, which ensured increase in plowing performance by 70%, a reduction in fuel consumption by 30% [13], are already being mass-produced. This reversible plow with reduced power consumption has been adopted by us for the proposed complex unit (figure 1).

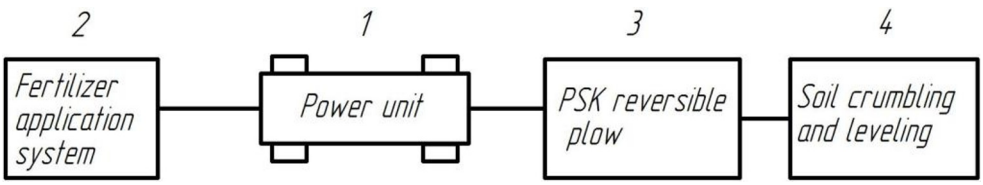

Fig. 1. Subsystems of proposed complex plowing unit: 1-power unit, 2-mineral fertilizer applicating attachment, 3-reversible plow without land-sides, 4-soil crumbling and leveling device.

Components of the proposed system: 1 - power unit - K-701 tractor; 2 - mineral fertilizer applicating device; 3 - PSK reversible plow; 4 - PVR-3,5 device of KubSAU.

Results and discussions.

We use the dependence of required power Ne of the tractor engine on its mass G_T in the sixth block when calculating direct energy costs, which are understood as the energy of the fuel consumed in MJ/ha. This dependence (figure 2) has been obtained by us through the approximation method and verified by the Cochran criterion.

Interaction of the presented subsystems is interconnected by a block diagram of the algorithm for optimizing parameters of complex unit (figure 3).

Proposed scheme includes 19 operators, of which the first one provides output of initial data with their limitations and transfers control to 2–6 blocks for calculating the parameters for each of the options for traction force of the K-701 tractor (20 kN, 24; 32; 36; 44 kN). For each tractive effort P_T, additional data are entered from the unit's traction

characteristics (blocks 7-11): operating speed V_o, hourly fuel consumption qt and unit traction power N_T.

In twelfth arithmetic operator, for all traction forces P_T (blocks 7-11), the estimated unit working width W_w is calculated, which is rounded up to an integer number of 0.5 m – the working width of PSK plow (arithmetic operator 13).

According to the formula we have derived in operator 14, the mass of the machine G_m is calculated considering the mass of plow and its attachments, and control is transferred to operator 15, that calculates for each working width W_w, speed Vo and furrow length L_f the coefficient τ – the use of working time shift.

Next, the unit performance is calculated for 1 hour of shift time (operator 16).

In the seventeenth arithmetic operator, the optimization criterion is calculated – the total energy consumption for plowing to a given depth α and the coefficient of soil resistivity kN/m2. Operating speed data for each tractive effort P_T and specific fuel consumption qt are also added to this block.

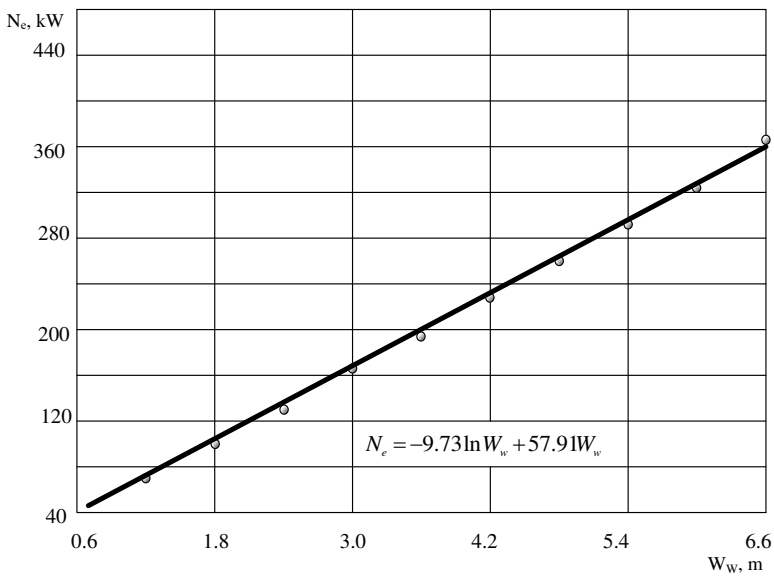

Fig. 2. Dependence of tractor engine power N_e on its mass G_T.

According to the minimum value of optimization criterion E, the operator 19 prints all the parameters and unit operating modes. Previously, the logic operator 18 checks whether the calculations have been performed with all the input data.

After that, the 19th operator prints out the optimal parameters of the comlpex plow unit, technological and design parameters at the minimum cost of the total energy Emin and gives the command to stop the calculation.

Based on the solution of problem, the dependences of optimization criterion E on the unit parameters and its operating modes have been obtained (figures 4-6).

Reliability of obtained dependences is confirmed by the Cochran criterion: for first dependence (figure 3), calculated value of the G_c criterion was 0.445, tabular G_t=0.768 ($G_c \leq G_t$); for the second dependence, respectively, G_c =0.561, G_t=0.768 and for the third dependence G_c =0.396, G_t=0.768

On all graphs, the extreme points of the function are clearly visible. With a minimum value of optimization criterion of 966 MJ/ha, the optimal value of the unit operation speed during plowing would be 8.1 km/h with a plow working width of 4,5 m and the unit traction force of 36 kN.

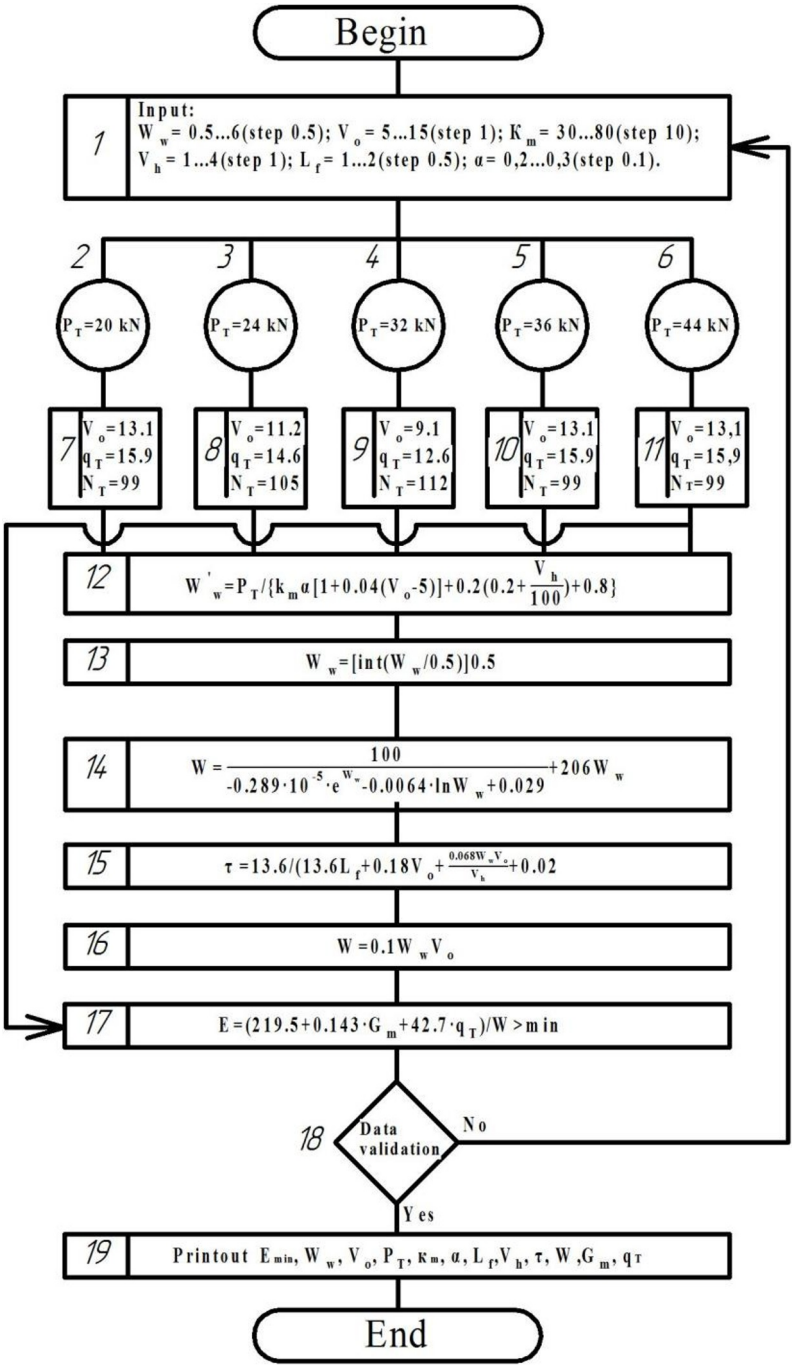

Fig. 3. Block diagram of algorithm for optimizing parameters of multifunctional plowing unit.

Optimal design parameters of the proposed plowing unit, in addition to the plow working width of 4.5 m, also include the same width of the press roller for leveling the plowing surface and the capacity of fertilizer hopper 4 m^3. Technological parameters when performing the technological process are: plowing depth α = 0.2 m, coefficient of soil

resistivity K_m = 30 kN/m^2, furrow length in the operation area L_f=1000 m. A flat field relief is assumed, the processed background is winter wheat stubble, the subsequent crop is also winter wheat. According to the scientifically substantiated farming system [7], only plowing is necessary after the spike-crop predecessors for winter crops, surface tillage in this combination would reduce the yield. And plowing should be carried out with reversible plows with the devices described above according to our inventions.

Dependence of the total energy consumption on the traction force on the K-701 tractor hook, obtained in Figure 3, has an optimum at P_T = 34 kN:

$$E(\mathrm{P}_T) = e^{0,003 \cdot P_T^2 + 4,193 \cdot \ln \cdot P_T - 0,335 P_T} \quad (1)$$

Where E – the total energy costs for operation performance process by the proposed plowing unit, MJ/ha; P_T – the K-701rated traction force on the operation speed 8.1 km/h, kN.

Minimum value of the optimization criterion of 966 MJ/ha increases both at lower values of tractive effort and at higher values compared to P_T = 44 kN – up to 1077 or 1.12 times.

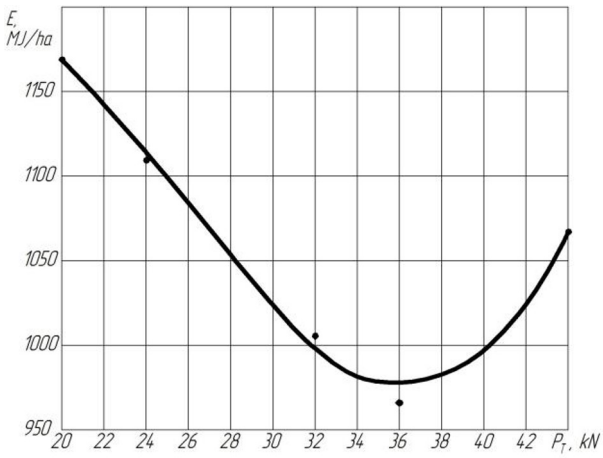

Fig. 4. Dependence of the total energy costs E on the value of tractive effort of unit P_T during the plowing unit operation.

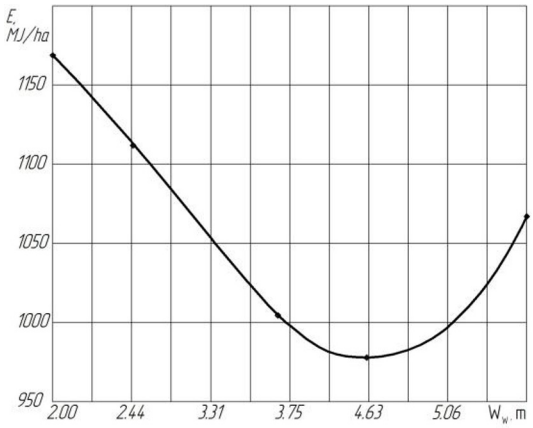

Fig. 5. Dependence of the total energy costs E on the unit working width W_w.

Similarly, energy costs increase, in comparison with optimal value, on a change in the working width Ww of the unit and the speed of movement Vo. So, with the optimal capture width Bp = 4.5 m, the energy costs are 966 MJ/ha, with its increase to 5.5 m they increase by 10.3 percent, and with P_T = 20 kN – already by 17.8 percent. Dependence of change in the total energy costs on the unit working width (figure 4) allows setting its optimal value:

$$E(W_w) = e^{(0.0015 \cdot e^{W_w} - 0.1285 \cdot W_w + 7.32)} \tag{2}$$

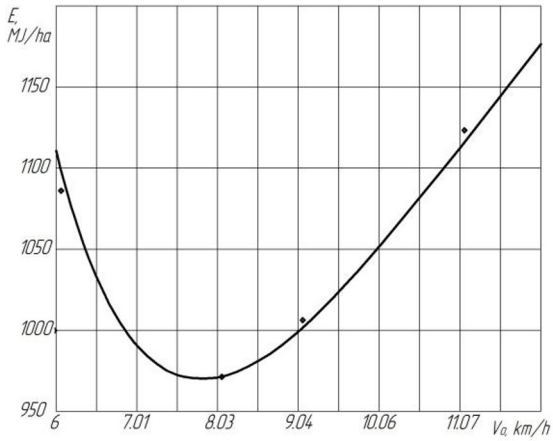

Fig. 5. Dependence of the total energy costs E on the unit operating speed V_o.

Obtained on the basis of process modeling, dependence of the total energy costs on the operation speed (figure 5) has the form:

$$E(\mathrm{V}_o) = \sqrt{\frac{242.78 \cdot 10^6}{e^{V_o}} + 107450 \cdot \mathrm{V}_p} \tag{3}$$

Value of the optimization criterion compared to the optimum (966 MJ/ha) varies from 10.3 percent to 17.8.

All results of modeling a complex plowing unit with a K-701 tractor are shown in the table 1.

Table 1. Simulation results of a complex plowing unit with a tractor.

Parameter title		Parameter value				
1	Unit rated traction force in different gears of tractor P_T, kN	20	24	32	36	44
2	Optimal unit working width W_w, m	2.0	2.5	3.5	4.5	5.5
3	Optimal unit hopper capacity V_h, m^3	4.0	4.0	4.0	4.0	4.0
4	Complex unit optimal mass G_m, kg	5887	6594	7959	9305	10736
5	Specific fuel consumption q_T, kg/ha	15.9	14.6	12.6	11.0	11.5
6	Optimal operation speed V_o, km/h	13.1	11.2	9.1	8.1	6.2
7	Shift time utilization factor τ	0.82	0.85	0.85	0.86	0.88
8	Optimal unit performance W, ha/h	2.15	2.34	2.71	3.12	2.99
9	Rated unit tractive power N_T, kW	99	105	112	117	120
10	Furrow working length L_f, km	1.0	1.0	1.0	1.0	1.0
11	Plowing depth α, m	0.22	0.22	0.22	0.22	0.22
12	Soil resistivity factor K_m, kN/m^2	30-35	30-35	30-35	30-35	30-35
13	Total Energy Costs *E*, MJ/ha	1177	1120	1040	966	1077

Conclusions.

Research results, presented in the table, allow to conclude that the modeling method, developed by the authors of a complex plowing unit, is highly significant, which fundamentally changes technological plowing process, increasing labor productivity by 1.05-1.5 times and reducing total energy costs in MJ/ha by 1.08-1.22 times, when the same plow design is afoot, but with different working widths, in relation to the traction capabilities of the K-701 tractor. Minimum value of total energy consumption of 966 MJ/ha is provided with a tractor pulling force of 36 kN and unit working width of 4.5 m. Increase in the working width to 5.5 m with this tractor leads to a decrease in operating speed and, accordingly, in performance, which increases specific energy costs for the plowing process. Proposed method of unit modeling contributes to make the right decision on the composition and operation mode of the complex plowing unit.

References

1. Naidenov A S 2015 Minimization of tillage in field crop rotations of the Kuban. Proceedings of KubSAU 1(52) 152
2. Malashikhin N V 2019 Progressive trends in the improvement of plowing units. *Scientific support of the agro-industrial complex*, *Krasnodar* 193-194
3. Maslov G G 2021 The advanced rational process flowsheets for cropping spiked cereals. *IOP Conference Series: Earth and Environmental Sciencethis link is disabled* **659(1)** 012038
4. Yudina E M 2021 IOP Conf. Ser.: Earth Environ. Sci. **839** 052029
5. *Farming system of the Krasnodar Krai on agro-landscape basis* 2015 (Krasnodar) 352
6. Petukhov D A, Nazarov A N, Chaplygin M E, Pronin I V and Pronina A S 2015 *Results of tests of agricultural machinery* (Moscow: FGBNU Rosinformagrotech) **1** 98
7. *Resource-saving in the technical operation of agricultural machinery* 2002 (Moscow: GOSNITI. FGNU Rosinformagrotech)
8. *The technology of cultivation of corn in Krasnodarskiy krai* 2001 (Krasnodar: publishing house "Agroprompoligrafist" LLC) 89
9. Maslov G G 2019 Optimization of parameters of a multi-functional unit based on a spring harrow. *International Journal of Engineering and Advanced Technology* **9(1)** 1915-1918
10. Konovalov V 2022 Tillage and Creation of Soil Structure in the Conditions of Krasnodar Territory. *AIP Conference Proceedingsthis link is disabled* **2503** 030009
11. *Series of plows PSK/LLC "Sur"* 2018 Retrieved from: www.sur.psk
12. E. M. Yudina, A. S. Serguntsov, S. K. Papusha, M. R. Kadyrov, *The principles of improving the technology of grain crop cultivation*, IOP Conference Series: Earth and Environmental Sciencethis link is disabled, **954(1)**, 012092 (2022)
13. G. G. Maslov, A. V. Palapin, E. M. Yudina [et al.], *The advanced rational process flowsheets for cropping spiked cereals,* IOP Conference Series: Earth and Environmental Science, **659(1)**, 012038 (2021)
14. V.V. Afanasiev, D.V. Brazhnichenko, V.I. Gaiduk, S.A. Kalitko, *Information technologies as a driver for the development of the economy of organizations,* Economics and Entrepreneurship, **10 (99)**, 699-701 (2018)
15. V.I. Gaiduk, S.A. Kalitko, A.A. Moskalevich, *Diversification as a technique for reducing the degree of risk in entrepreneurial activity* Economics of agricultural and processing enterprises, **2**, 24-26 (2012)