Simulation modeling in infrastructure modernization projects of the Russian part of the Central Eurasian Corridor

Olga Korotun[1,*], *Aleksey* Kolodochkin[1], *Yuliya* Laamarti[2], and *Aidar* Assylbayev[3]

[1]Moscow Polytechnic University, Moscow, Russia
[2]Financial University under the Government of the Russian Federation Russia, Moscow, Russia
[3]Kyrgyz-Russian Slavic University named after the First President of the Russian Federation B.N. Yeltsin, Bishkek, Kyrgyz Republic

Abstract. The article presents a brief characteristic of international transport corridors running through Russia. Their key nodes and the need for their sustainable development are identified. The use of structurization, analysis and synthesis methods allowed the study to obtain quantitative and qualitative characteristics of transport infrastructure facilities of Russian cities, through which the railway branches of the Central Eurasian Corridor pass. The rules of interaction between the key elements that make up the structure of each of the research objects have been established. A set of such rules and object characteristics became the input parameters for the simulation model of the problem domain. The problem area includes all bottlenecks in the transportation network formed by the intersection and merging of traffic flows. State diagrams illustrating the peculiarities of the behavior of object groups of the simulation model on the example of the city of Orenburg are developed.

1 Introduction

The International Transport Corridor is a high-tech transportation system forming certain directions of rail, road, river or sea transport. Such corridors are of high importance in Eurasia due to the continental nature of many countries in the region [1]. The alignment of routes ensures the conjugation of Eurasian integration and the Silk Road Economic Belt [2].

Several overland parts of transportation corridors pass through Russia's territory. The first route is meridional: "North to South". It provides cargo transportation between the states of North-Western Europe and the countries of the Caspian Basin, the Persian Gulf, Central, South and Southeast Asia using the Russian transport infrastructure [3]. As for the railroad route of the corridor, it involves several options: the Western Branch (Russia – Azerbaijan – Central Asian and Transcaucasian countries – Iran), the Trans-Caspian route (using Russian ports of the Caspian basin and Iranian ports) and the Eastern Branch (Russia – Kazakhstan – Uzbekistan – Turkmenistan – Iran). The second route is a latitudinal route with several branches on the territory of Russia: "East – West". It has four main routes in

* Corresponding author: Korotunon@yandex.ru

the general direction China-Europe-China: three run along the Trans-Siberian with different entry points, one through the territory of Kazakhstan, Russia and Belarus. Transportation by land routes has a high competitive potential compared to alternative sea routes. This is not only due to delivery time, but also due to cost characteristics [3, 4]. The Eurasian route of the East-West transport corridor is the main route for the transit of goods by rail between China and the European Union [2, 5].

Supporting the long-term interest of states in the use of transit routes along the transport corridor should be carried out with the solution of problems and modernization of transport and logistics infrastructure, administration and establishment of interregional links [1, 3].

Thus, the *study aims* to create models of key facilities in the Russian part of the Central Eurasian Corridor. The obtained models reflect all quantitative and qualitative characteristics of real objects, thus allowing to conceptualize and evaluate the results of short-term and long-term changes in different characteristics. This is the *theoretical relevance* of the study. *Practical relevance* lies in obtaining and using the results for effective operational management and creating conditions for sustainable development of regions.

2 Materials and methods

Simulation modeling is a method of studying systems or objects by creating a computer model that reproduces the structure and processes of functioning of real systems or objects [6, 7].

Obtaining such a model requires generating a set of features and rules that accurately describe all aspects of the subject domain. This requires the use of structuring, analysis and synthesis techniques. The results obtained in the course of complex application of such methods allow to form the key attributes of the subject area and the rules of their interaction between themselves and external factors. All of these are inputs to a formal model that simulates the subject domain [8]. This is confirmed in the works of domestic and foreign scientists engaged in modeling of processes and systems [6, 9-11].

The results obtained are required to be visualized for demonstration. The graphical method is used for this purpose. It is the graphical method that allows to visualize any complexity of a process or object structure in an intuitive graphical notation. As Logachev [11, 12], Altunina [13] and Zhao [9] point out in their works, this allows any structural block of the process to be interpreted in the same way by different specialists, which streamlines professional communications between teams of researchers, developers and managers.

3 Results

The Eurasian rail transport corridor in Russia has branches and is divided into the Northern Eurasian (St. Petersburg, Moscow, Nizhny Novgorod, Perm, Yekaterinburg, Omsk, Novosibirsk, Krasnoyarsk) and Central Eurasian (First Branch: St. Petersburg, Moscow, Kazan, Yekaterinburg, Kurgan; Second Branch: St. Petersburg, Moscow, Samara, Orenburg). [as per https://cargo.rzd.ru/ru/9789]. Uninterrupted functioning of a transport corridor is possible only if each transport node operates in a coordinated manner with connectivity between them. Communication refers not only to the channel through which information about the current state of the train schedule, signal data or other information is transmitted, but also to the physical track (railroad tracks).

The stated research methods were applied to the physical facilities of the transportation corridor. Thus, quantitative and qualitative characteristics and their relations for the

condition of the railroad track and the adjacent infrastructure are obtained. This is essentially the input parameters and rules for the simulation model of the object. Let us give as an example the study results for the track section in Orenburg.

Within the framework of the transportation corridor, the Orenburg Oblast is a bordering region with Kazakhstan, which increases the load on the transportation network. In addition, it should be considered that in order to ensure high capacity of the track section, it is necessary to modernize the adjacent infrastructure in such a way that conflicting flows are reduced. Let us consider an urban area from this point of view (Figure 1).

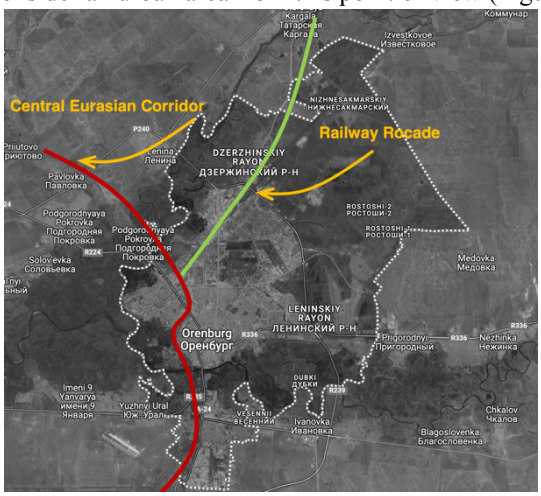

Fig. 1. Scheme of the railway transportation corridor in Orenburg (Google Maps background image source: https://goo.gl/maps/rfvtVgRxcT3heiLX8)

The railway bypass actually connects two branches of the Central Eurasian Transport Corridor. In addition to the main transportation corridor, there are businesses within the city that are integrated into the rail network by separate tracks. Using the structuring method, bottlenecks in the transportation network that create conflicting flows were identified. Conflicting flows refer to the intersections of railroad tracks with roadways and pedestrian areas, as well as the merging of railroad tracks from different directions.

If we analyze the main direction of the transport corridor, we can identify one bottleneck with conflicting flows (Figure 2).

Fig. 2. Intersection of railroad tracks and a highway in Orenburg (Yandex-Panorama image source: https://yandex.ru/maps/-/CDeKv~c)

This is the presence of a regulated railroad crossing equipped with sound and signal automatics, as well as barriers and ground barrier devices in the intersection area of Musa Dzhalil and Luganskaya Streets. In addition, there is a crosswalk at the specified location. Synthesizing the obtained data, a parametric traffic flow model M was created:

$$M = \{A_1, A_2, P, D_1, D_2, D_3, D_4, D_5\},$$

where A_i is the set of automobile flows (i = 1, 2);

P – pedestrian flow;

D_i is the set of railway flows corresponding to the number of tracks (i = 1, 2, ..., 5).

The agent behavior model of this set of objects is represented in the form of state diagrams (Figures 3-4).

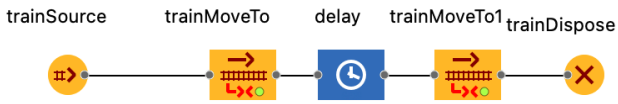

Fig. 3. Behavior model of railway transport objects

Rail transport has priority over road transport or pedestrians, so only a semaphore signal that there is a free track (*delay* state in Figure 3) is a traffic limiter.

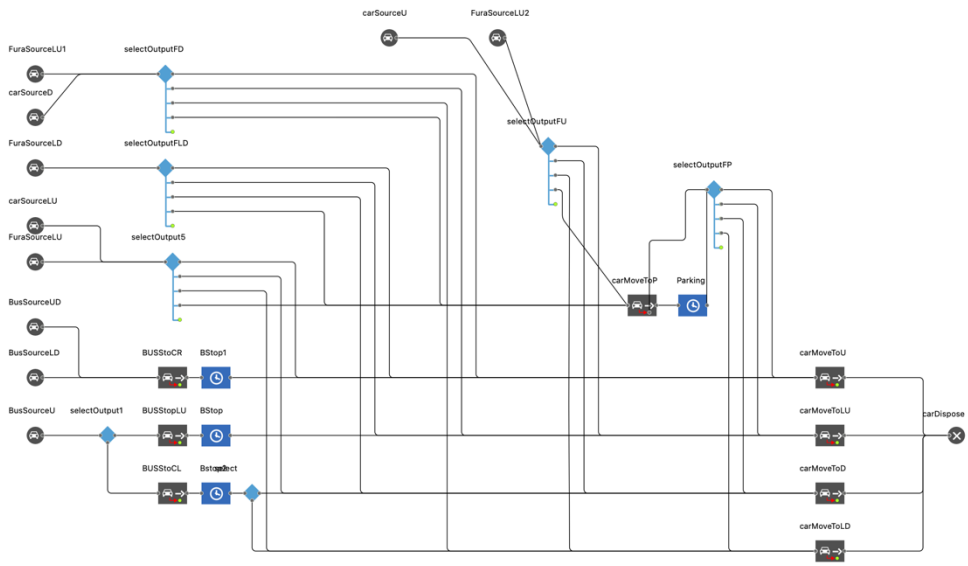

Fig. 4. Behavioral model of vehicular traffic objects

The main constraint to vehicular traffic in the study area is the railroad crossing, which regulates traffic. In Figure 4 BStop$_i$ elements correspond to the delay state before a closed crossing. The remaining elements characterize traffic conditions on the adjacent streets to the study railroad crossing, accounting for traffic in the opposite direction.

The model of pedestrian behavior at a given site is similar to the model depicted in Figure 3. The pedestrian is either crossing the railroad tracks or waiting for a permissive traffic signal to start moving.

It should be considered that the developed models are “ideal”, i.e., represent the behavior of object groups as a whole. This means that if a forbidden traffic light (or

semaphore) is illuminated, the corresponding object group stops its movement. In reality, there may be individual elements from an object group (motorists or pedestrians) that will stop at a red traffic signal and continue driving. Software code in a software environment is used to create a simulation model to simulate such situations (i.e., exceptional behavior by individual elements).

4 Discussion

The development of a simulation model involves the selection of a conceptual framework for description. Such a scheme is based on a certain methodological approach of perceiving and describing the functional interrelationships of the system. Most important in modeling any process or object are the simplifications or assumptions that have been incorporated by the model. The list of elements and their interaction rules should be relevant to the problem domain. This is achieved by using general scientific research methods and the similarity of the results obtained with those obtained by other researchers in the field [6, 8, 10, 13].

The development of formal models that reflect key aspects of a real object or process provide insight and a systematic approach to formulating research objectives and unified solutions to problems. The nature of the obtained models allows us to accurately formalize multicriteria in dynamics, considering the diversity of conditions of the transport system [8, 9, 14, 15].

5 Conclusion

International transportation corridors are an economic and political means of unifying space. The Eurasian Corridor is of key importance due to its continental location, which determines the leading role of rail transport. Modernization of transport logistics and related infrastructure contributes to strengthening Russia's role as one of the leading transit countries on the route from Asia to Europe. This ensures sustainable development of the regions included in the transcontinental routes.

Assessment of risks, management results, infrastructure modernization, and environmental impact is possible only with the use of accurate simulation models of all facilities related to transport corridors. It should be noted that simulation modeling allows not so much to perform error-free calculations as to conduct multivariate analysis of functioning and development of transport systems. This can be done either in real or virtual conditions with direct management or participation of specialists of the modeled domain.

References

1. International Transport Corridors in Eurasia: Development of Latitudinal Routes, Eurasian Rail Alliance, Information and Analytical Review (2020). Accessed on: August 08, 2023. [Online]. Available: https://index1520.com/upload/medialibrary/954/
2. N.V. Lukyanovich, World Econ. Chal. Glob. Devel. **1(2)**, 19-26 (2014)
3. E.A. Chistyakova, O.Yu. Sokolova, S.V. Zakharova, Agr. Sci. J. **12**, 98-100 (2018)
4. T.M. Stepanyan, East Europ. Sci. J. **4-7(44)**, 59-65 (2019)
5. K.A. Siparo, Transp. Bus. Rus. **1**, 42-47 (2022) https://doi.org/10.52375/20728689_2021_6_42
6. A. Krasnikov, I. Nikishina, Yu. Laamarti, I. Voronin, I. Okhotnikov, I. Litvin, E3S WoC **363**, 02037 (2022) https://doi.org/10.1051/e3sconf/202236302037

7. S.F. Shakhnov, V.V. Karetnikov, A.A. Butsanets, A.E. Sazonov, Transp. Res. Proc. **68**, 363-371 (2023) https://doi.org/10.1016/j.trpro.2023.02.049
8. M. Logachev, V. Bugrimov, A. Kondratiev, Transp. Res. Proc. **63**, 2335-2340 (2022) https://doi.org/10.1016/j.trpro.2022.06.267
9. S.W. Zhao, E3S WoC **283**, 02001 (2021) https://doi.org/10.1051/e3sconf/202128302001
10. M. Logachev, A. Tkachev, I. Nikishina, E3S WoC **363**, 02036 (2022) https://doi.org/10.1051/e3sconf/202236302036
11. M.S. Logachev, N.A. Orekhovskaya, T.N. Seregina, S. Shishov, S.F. Volvak, J. Open Innov.: Tech., Market, Compl. **7(1)**, 93 (2021) https://doi.org/10.3390/JOITMC7010093
12. M. Logachev, V. Chernova, V. Kovaleva, AIP Conf. Proc. **2560**, 020013 (2023) https://doi.org/10.1063/5.0124704
13. Yu. Altunina, Yu. Laamarti, Kh. Kuchmezov, I. Zaichikova, I. Patsakula, E. Khachikyan, E3S WoC **363**, 02033 (2022) https://doi.org/10.1051/e3sconf/202236302033
14. M. Logachev, E. Tolkacheva, S. Shibaev, V. Chernova, A. Butyrin, E3S WoC **403**, 07011 (2023) https://doi.org/10.1051/e3sconf/202340307011
15. I. Nikishina, T. Karyagina, P. Mironov, V. Churin, E3S WoC **403**, 07017 (2023) https://doi.org/10.1051/e3sconf/202340307017