Temperature Control System for Albumin Extraction and Pasteurization Process of Snakehead-Fish (*Channa striata*)

Onny Setyawati[1*], *Andhika P.* Putra[2], and Nurussa'adah[1]

[1]Electrical Engineering Department, Faculty of Engineering, Brawijaya University, 65145, MT Haryono 167, Malang, Indonesia
[2]Student of Electrical Engineering Department, Brawijaya University, 65145, MT Haryono 167 Malang, Indonesia

Abstract. One of the crucial proteins present in the plasma of human blood is albumin. Among the freshwater fish species, the snakehead-fish is noteworthy for its high albumin content. However, many participants in the snakehead-fish albumin industry, particularly in home and traditional industries, often neglect the importance of maintaining precise temperature and time during the extraction process. Prolonged exposure to high temperatures during extraction can lead to a decrease in albumin levels. This study aimed to develop a temperature control system for the snakehead-fish albumin extraction apparatus. The system had the capability to accurately measure and maintain the heating temperature within the range, and monitor the process. The evaluation of the design's compliance with predetermined specifications and operational principles was presented. The PT100 temperature sensor was used to measure the temperature within the extraction apparatus, and the microcontroller processed the temperature data to regulate the dimmer level through a control mechanism. The temperature control system utilizing on-off control was anticipated to generate temperatures ranging from 60-70°C during the extraction phase and maintain temperatures below 43°C during pasteurization. The test results of the extraction process utilizing a lower setpoint of 63°C and an upper setpoint of 67°C, revealed that the maximum temperature recorded was 68.95°C, while the minimum temperature was 60.99°C.

1 Introduction

Advancements in technology and instrumentation have managed a substantial influence on the economic landscape of the community. This phenomenon is sustained by the increased of household industrial equipment that integrates the outcomes of technological progress. Nevertheless, certain domestic industries remain unable to utilize technology within their production processes due to deficiencies in resources and a drawback of financial support. As an example, a home-based enterprise specializing in albumin production necessitates not only the attainment of high-quality results but also the implementation of effective

* Corresponding author: osetyawati@ub.ac.id

technological processes within its production facilities. Albumin assumes a pivotal role in the establishment of novel cellular networks [1] and stands as one of the pivotal proteins within human blood plasma. Diminished albumin concentrations within the body, or hypoalbuminemia, might indicate malnutrition, chronic liver diseases, malabsorption disorders, and severe burn injuries.

Within the industry, the current tools applied for the extraction and pasteurization of albumin require the use of distinct steaming vessels. The steaming process is conducted separately, and the temperature regulation is manually overseen by periodic observation of an available thermometer, with adjustments made accordingly. The quality assurance procedure for snakehead-fish albumin incorporates pasteurization after the extraction process. Pasteurization is conducted using a conventional, separate apparatus consisting of two pans heated on a stove. The basic principle underlying pasteurization is the rapid application of heat to the product until it attains a specific combination of temperature and duration, sufficient to eliminate all pathogenic microorganisms, while causing minimal thermal damage to the product [2]. Pasteurization is typically employed to items that are vulnerable to damage when exposed to heat or are unsuitable for commercial sterilization [2-4], and this includes albumin.

The extraction process is needed for acquiring albumin from snakehead-fish. Through this process, the utilization of albumin, particularly within the medical field, is facilitated, obviating the need to consume processed snakehead fish products. However, achieving optimal results during the extraction of snakehead fish albumin hinges significantly upon the precise control of temperature and processing duration. Many players in the snakehead albumin industry, especially home and traditional industries, pay little attention to the accuracy of temperature and duration in the production process. However, many participants in the snakehead albumin industry, particularly those in home-based and traditional sectors, often neglect the importance of maintaining accuracy in temperature and duration during the production process.

This tool comprised three principal components, namely the drive system, the power converter, and the temperature controller, all of which operated continuously. The drive system encompassed a single-phase induction motor generating centrifugal force on an extraction tube, facilitating the acceleration of the extraction process. Simultaneously, the extraction tube served as the platform for the extraction process involving snakehead-fish. The power converter comprised an AC-DC converter, which functioned as the power source for the microcontroller. The energy consumption employed by the tool using a single phase induction motor, with and without inverter, was reported in [5]. According to Fitriyani [6], an extended temperature and heating duration during the extraction process led to a reduction in the albumin levels. In [6], the highest recorded albumin level, amounting to 0.0098 g/dl, was achieved at a temperature of no higher than 70°C and the heating duration did not exceed 25 minutes.

In this study, we present the design and the measurement test of temperature control system for the snakehead-fish albumin extraction and pasteurization. In this proposed tool, the snakehead-fish albumin extraction process used steaming and centrifugation methods, wherein RTD PT100 temperature sensor [7-8] with on-off control and ArduinoNano microcontroller [9-10] were employed. The steaming temperature would automatically be maintained at a temperature range of 60-70°C for 25 minutes by the temperature control system. Temperature control relied upon a temperature sensor to read the temperature of the steaming steam, and then it was processed by a microcontroller to regulate the amount of electric stove heating power via a dimmer. Then proceed with pasteurization of the collected albumin. The pasteurization process was carried out by heating the albumin intended to inactivate dangerous microbes thereby increasing the albumin's durability when stored.

Meanwhile, in the pasteurization process, it was noteworthy that the heating temperature should not exceed 43°C, as indicated by Utomo [11].

We organize this paper as follows, the second section shows the method for realizing the tool including the hardware and software design. The results and discussions are presented in the third section, the last one concludes the findings.

2 Method

The primary objective underlying the design of this tool was to establish a precise temperature control system for both snakehead-fish albumin extraction and pasteurization, following the predefined tool specifications.

The specifications of the tools to be realized were as follows:

1. The temperature sensor employed was an RTD PT100, with a designated range spanning from room temperature, approximately 25°C to 100°C.
2. The temperature controller was responsible for maintaining the extraction process temperature within the range of 63-70°C, and ensuring that the pasteurization process remains below 43°C.
3. The heating actuator selected was an electric stove, featuring a heating element power rating of 600 W.
4. To regulate the heating element power, a series of dimmers were employed.
5. The Real-Time Clock (RTC) utilized was the DS3231.
6. To serve as the user interface, a 20x4 character Liquid crystal displays (LCD) display was integrated.
7. The processing of data was executed by an ArduinoNano board, equipped with an ATMega328P microcontroller.

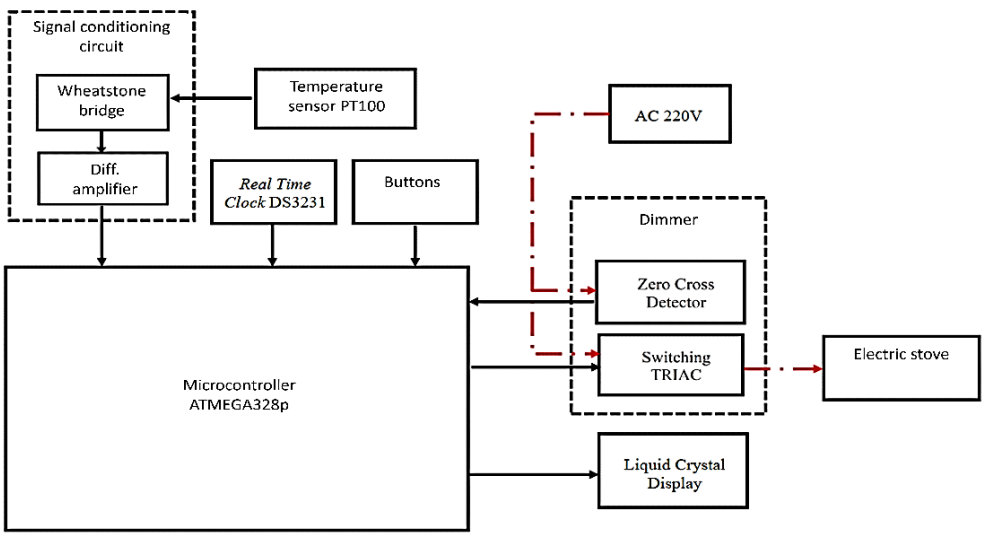

Fig. 1. System block diagram.

The system block diagram is shown in Fig.1. The temperature sensor was used to obtain the temperature data from both the extraction and pasteurization equipment in the form of an analog signal, transmitted to the microcontroller. The RTC as a giver of time information worked as a process timer calculation. A series of buttons for the interface was provided hence it enabled user to start or stop/pause the processes. Microcontroller as the control center

of the whole system. The microcontroller received data from the temperature sensor and RTC, and determined the amount of power that was transmitted by the dimmer to the electric stove. Apart from that, it also controlled the characters that were displayed on the LCD. The dimmer circuit served as a power regulator, passed on to the electric stove as the main heater, therefore the heating temperature was regulated. LCD was selected to display important information to users in character form.

2.1 Designing the hardware

The temperature sensor design comprised the utilization of the PT100 sensor and a dedicated signal conditioning circuit [12-13]. The configuration of the signal conditioning circuit was tailored to align with the specific output signal characteristics exhibited by the PT100 sensor. In accordance with the sensor's characteristics, the output value range of the PT100 sensor was from 100 to 138.5 Ω. Consequently, a signal conditioning circuit was requisite to transform this value range into a range spanning from 0 up to a maximum of 4.995 V, thus ensuring proper readability by the microcontroller's analog-to-digital converter (ADC).

To convert the output resistance value from the PT100 sensor into a voltage range compatible with the ADC, the initial step involved the introduction of a Wheatstone bridge signal conditioning circuit. The subsequent phase required the implementation of a signal conditioning circuit to enable the input of the Wheatstone output, which spans from 0 V to 114 mV, into the ADC. The conversion of the Wheatstone output voltage to the ADC input voltage was achieved through the utilization of a differential amplifier. The dimmer circuit's primary objective was to regulate the power allocation to the electric stove load. This dimmer circuit was comprised of two principal components i.e. the TRIAC switching circuit and the zero-cross detector circuit. The zero-cross detector's role served as the point of zero voltage crossing between the positive and negative cycles of a sinusoidal waveform. This information acted as the trigger signal for the TRIAC switching operation, as utilized by the microcontroller. The specific switching delay of the TRIAC, denoted by the switching angle α, was determined with respect to the zero-cross point, a parameter configured within the microcontroller program. The circuit interfaced with the microcontroller through the utilization of two digital pins, each serving as both input and output interfaces.

2.2 Designing the software

The programming language employed was C++, utilizing the Arduino IDE software. The temperature control system utilized on-off control, with distinct lower and upper setpoints for two operational phases: 63°C as the lower setpoint and 67°C as the upper setpoint during the extraction phase, and 35°C as the lower setpoint and 40°C as the upper setpoint during the pasteurization. Upon reaching the lower setpoint temperature, a timer started, counting each passing second. It was important to note that the duration of both the extraction and pasteurization processes were constrained: the extraction process was limited to 1500 seconds, whereas the pasteurization was constrained to 900 seconds. The flowchart is shown in Fig. 2.

The whole system testing was performed to test whether the system worked according to the flow diagram. In the test all circuit blocks were connected. The predetermined on-off control parameter values were entered, and the tool performance results were observed and analyzed. The 220 V supply, the PT100 sensor and signal conditioning, the dimmer circuit, RTC DS3231, the microcontroller, a stove, and a pan with water of 1.5 L were used in the test.

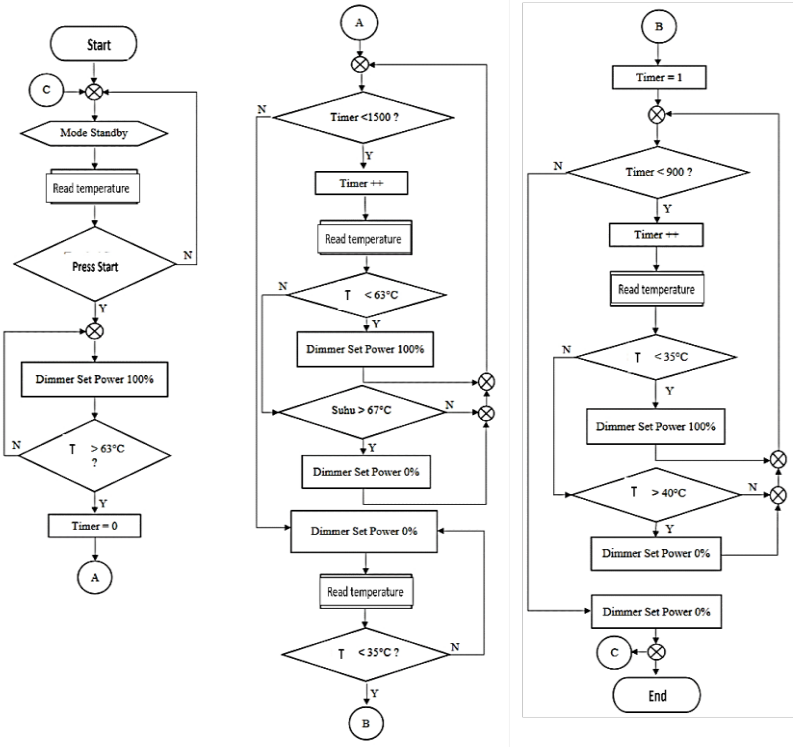

Fig. 2. Software design flowchart.

The preparation procedures were as follows: 1) Assemble tools and materials numbers 2 – 7 (see the tools' specification); 2) Provide 220V voltage supply; 3) Place the pan on the electric stove and add 1.5 liters of water; 4) Install the sensor in a certain position; 5) Upload the program that was created according to the flow diagram; 6) Open the data logger application to record data from Arduino, 7) Press the START button and wait for the process to run until the timer ended; 8) Process data stored on the computer into graphic form.

3 Results and discussions

The measurements carried out for this tool were: test of the temperature sensor, the Wheatstone bridge circuit, the differential amplifier, PT100 signal conditioning, the dimmer circuit, and the whole system. Here we showed details of the dimmer circuit and whole system tests.

The purpose of measuring this dimmer was to investigate the effect of the dimmer circuit on the voltage, current and power of the electric stove, according to the dimmer level specified on the microcontroller. The set-up test is shown in Fig. 3, where the ArduinoNano, e-stive 600 W and power meter PZEM-004T were used. The dimmer level was adjusted via serial monitor of ArduinoNano, the voltage, current and power shown on PZEM were observed and evaluated. The results are summarized in the graph in Fig. 4. The ignition angle of 0 – π, stepped up one fifth for each 20 % of dimmer level, e.g. 0 % at 0 rad, 40 % at 2π/5 rad. Based on Fig. 4 we concluded that the dimmer level was directly proportional to the power, current and voltage values supplied to the electric stove.

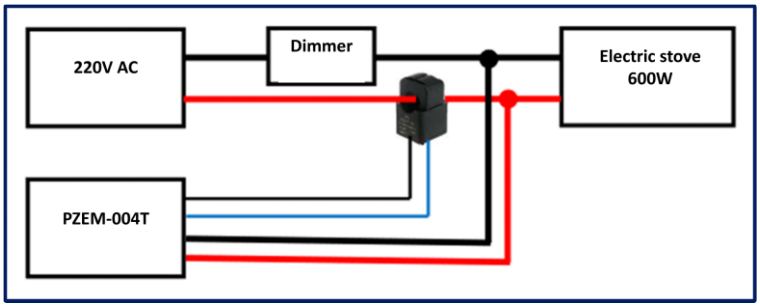

Fig. 3. Set-up of the dimmer level measurement.

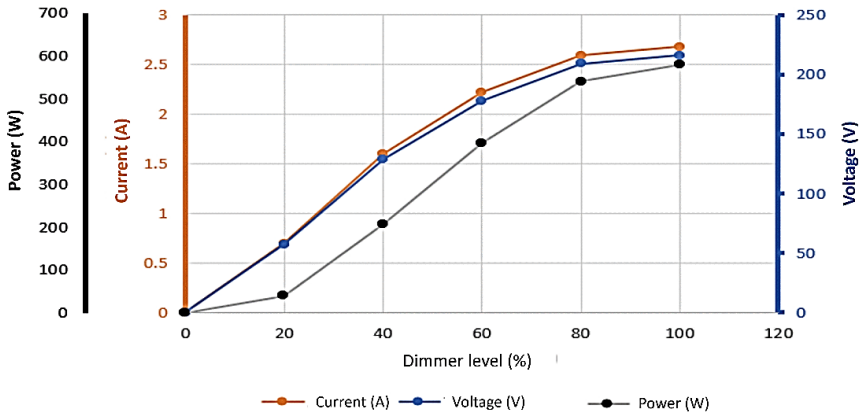

Fig. 4. Graph of the power-current-voltage as a function of dimmer level.

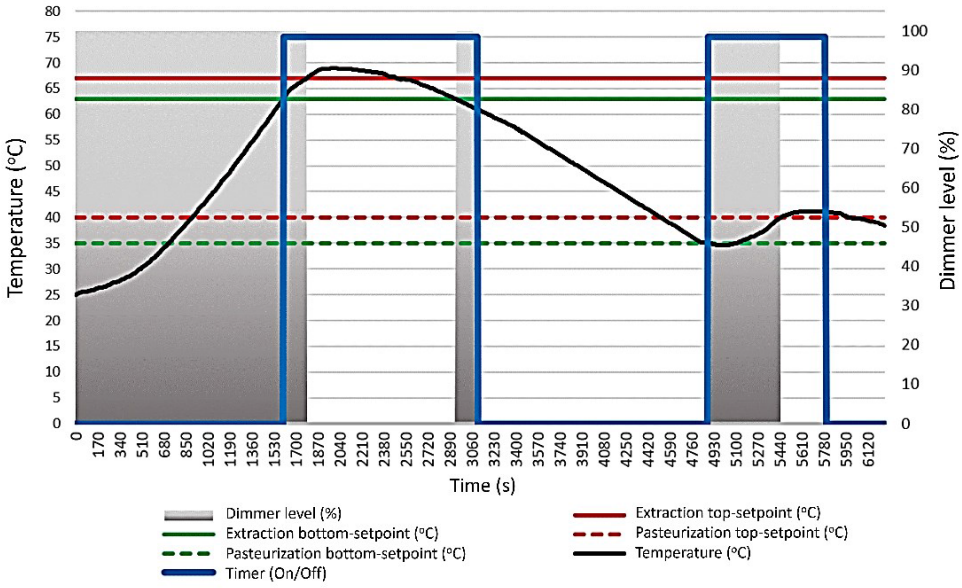

Fig. 5. Measurement results of the whole temperature control system.

Testing the entire system, shown in Fig. 5, revealed that the temperature control and time duration limitation for each extraction and pasteurization process were in accordance with what was designed in the software. The temperature system applied on-off control with a lower setpoint of 63°C and an upper setpoint of 67°C during extraction, and during pasteurization it utilized a lower setpoint of 35°C and an upper setpoint of 40°C. The time of the extraction and pasteurization processes were limited to 1500 seconds and 900 seconds, respectively.

The temperature control system was expected to produce temperatures between 60-70°C during the extraction and below 43°C during the pasteurization. From the test results of the extraction process that applied a lower setpoint of 63°C and an upper setpoint of 67°C, the highest temperature was 68.95°C and the lowest was 60.99°C. Whereas in the pasteurization process with a lower setpoint of 35°C and an upper setpoint of 40°C, the highest temperature reached 41.18°C and the lowest was 34.58°C.

The duration of the extraction stage was limited to 1500 seconds and the pasteurization stage to 900 seconds. From the tests we found that the temperature control process at the extraction stage started at the 1600th second and ended at the 3100th second, while the pasteurization stage started at the 4890th second and ended at the 5790th second. It can be concluded that the duration of each process was in accordance with the initial design, the extraction stage was exactly 1500 seconds, and the pasteurization stage was 900 seconds.

4 Conclusion

The design of the temperature control system for the snakehead fish albumin extraction and pasteurization equipment encompassed both hardware and software components. The hardware design of the system included key elements such as a PT100 sensor, ArduinoNano, dimmer circuit, RTC DS3231, and various supplementary components. To ensure the accurate reading of signals from the PT100 sensor by the ArduinoNano's ADC, a signal conditioning circuit was crucial, comprising a Wheatstone bridge and a differential amplifier. On the software design front, the temperature data successfully acquired by the Arduino Nano was subject to processing through the application of an on-off control algorithm. The outcomes of the control mechanism were subsequently utilized to regulate the temperature by modulating the level of the dimmer, connected to the electric stove, serving as the primary heating source. Furthermore, the ArduinoNano undertook the calculation of the duration of each extraction and pasteurization process by processing time-related data obtained from the RTC DS3231.

The temperature control system employing on-off control was anticipated to maintain temperatures within the range of 60-70°C during the extraction phase and below 43°C during the pasteurization. Following the analysis of test results, it was observed that the extraction process, with a lower setpoint of 63°C and an upper setpoint of 67°C, yielded a maximum temperature of 68.95°C and a minimum of 60.99°C. Meanwhile, during pasteurization with a lower setpoint of 35°C and an upper setpoint of 40°C, the highest temperature achieved was 41.18°C, with the lowest temperature recorded at 34.58°C. Additionally, during system testing, it was confirmed that the control system effectively limited the duration of each extraction phase to 1500 seconds, and the pasteurization phase to exactly 900 seconds.

References

1. A. Lacroix, H.H. Fakih, H.F. Sleiman, J Controlled Release, **324**, 34-46 (2020)
2. C. Calderon-Cordova, J. Criollo, J. Fernandez, D. Japon, R. Remache, C. Ramirez, *Temperature monitoring system for the pasteurization process applied to the small dairy industry*, in Proceedings of the 13th Iberian Conference on Information Systems and Technologies (CISTI), 13-16 june 2018, Caceres, Spain (2018)
3. V. Hristov, D. Slavov, *Automated Control of Pasteurization in Wine Production*, in Proceedings of the 3rd International Congress on Human-Computer Interaction, Optimization and Robotic Applications (HORA), 11-13 June 2021, Ankara, Turkey (2021)
4. J. Espin, S. Estrada, L. Caiza, O. Aguirre, D. S. Benítez and O. Camacho, *Sliding Mode Control Applied to a Pasteurization Plant: A Performance Evaluation*, in Proceedings of the IEEE Biennial Congress of Argentina (ARGENCON), 7-9 September 2022, San Juan, Argentina (2022)
5. O. Setyawati, A. B. Sholeh, A. N. Mahardika, A. P. Putra, Nurussa'adah, T. Taufik, *Energy Saving Inverter on A Single-Phase Induction Motor for Albumin Production Process*, in Proceedings of the IEEE 12th Annual Information Technology, Electronics and Mobile Communication Conference (IEMCON), 27-30 October 2021, Vancouver, BC, Canada (2021)
6. E. Fitriyani, I. Meidy, J. Galung Tropika **7**, 102 (2018)
7. Q. Wang, G. Wang, X. Xie, L. Zhou, *Design and simulation for temperature measurement and control system based on PT100*, in Proceedings of the IEEE 4th Advanced Information Technology, Electronic and Automation Control Conference (IAEAC), 20-22 December 2019, Chengdu, China (2019)
8. J. A. Prakosa, Purwowibowo, D. Larassati, *Development of Simple Method for Quality Testing of PT100 Sensors Due to Temperature Coefficient of Resistance Measurement*, in Proceedings of the International Symposium on Electronics and Smart Devices (ISESD), 29-30 June 2021, Bandung, Indonesia, (2021)
9. N. K. Kumar, D. Vigneswari, C. Rogith, *An Effective Moisture Control based Modern Irrigation System (MIS) with Arduino Nano*, in Proceedings of the 5th International Conference on Advanced Computing & Communication Systems (ICACCS), 15-16 March 2019, Coimbatore, India (2019)
10. N. Girinath, C. Ganesh Babu, Chandru, R. Surendar, V. Sabarish, T. Abhirooban, *Arduino nano based Smart Glasses*, in Proceedings of the 6th International Conference on Intelligent Computing and Control Systems (ICICCS), 25-27 May 2022, Madurai, India (2022)
11. G. Utomo, *Pengaruh Suhu Pasteurisasi Kapsul Albumin Terhadap Efektifitas Kenaikan Kadar Albumin Serum,* Tesis. Surakarta: Universitas Sebelas Maret (2014)
12. N. Das, K. Kalita, P. K. Boruah, U. Sarma, *Design Validation and Performance Investigation of Signal Conditioning Circuit for Capacitive Sensor*, in Proceedings of the IEEE 5th International Conference for Convergence in Technology (I2CT), 29-31 March 2019, Bombay, India (2019)
13. J. Sun, L. Zhao, H. Zhou, S. Zhang, Y. Ning, W. Zhu, *A Novel Signal Conditioning Circuit for Electromagnetic Field Detection*, in Proceedings of the 13th International Symposium on Antennas, Propagation and EM Theory (ISAPE), 1-4 December 2021, Zhuhai, China (2021)