Design of Mobilization System on Mobile Pulper Machine

Muh. Rinaldi[1], *Iqbal* Iqbal[1], *Mursalim* Mursalim[1,2] and *Abdul* Azis[1]

[1]Agriculture Engineering Programme, Department of Agricultural Technology, Faculty of Agriculture, Hasanuddin University, 90245, Makassar, Indonesia
[2]Center of Excellence in Science and Technology on Food Product Diversification, Hasanuddin University, 90245, Makassar, Indonesia

Abstract. There are several coffee pulping machines that are commonly used by farmers, but there are some drawbacks to these pulping machines. For example, a pulper machine with a large construction does not allow peeling in the coffee harvesting area. The purpose of this research is to design and build a prototype of a mobile wet coffee peeling machine (pulper). The research method used starts from design analysis. Furthermore, the data from the design analysis was used as the basis for making the prototype of the mobile pulper machine. The testing method used is based on functional tests, structural tests and mobility testing of the mobile pulper to see the feasibility of mobilizing the machine. The results of the study show that the coffee pulper can be mounted on a modified motorcycle frame. The peeling cylinder is rotated by power from the engine and uses a shaft extender as an additional shaft from the engine. The transmission system used is pulley and belt with the ratio of engine pulley and peeling cylinder which is 1:4. The engine rotation in the idle position is 1289 RPM which produces a peeling cylinder rotation of 279 RPM in the test without material and 204 RPM in the test with material. The hopper used is a built-in hopper with a volume of 0.028 m3 or 15 kg of coffee cherries for one filling. It can be concluded that the mobile pulper machine can be used for peeling in the coffee harvesting area.

1 Introduction

1.1 Background

Coffee plants are a source of income for at least more than 1,5 million coffee farmers in Indonesia. The area of coffee plantations in Indonesia has continued to increase in the last 5 years after experiencing a decline in 2019. In 2022, the coffee plantation area reached 1,262,590 ha [1] Based on data from BPS South Sulawesi Province, coffee plantations in South Sulawesi rank 8th with a total coffee plantation area of 77,591 ha consisting of 1,365 ha of Large Plantations and 76,226 ha of Smallholder Plantations with a total coffee production of 34,242 tons in 2021 [2] Therefore, proper post-harvest handling of coffee is required. There are several coffee pulping machines that are commonly used by farmers, but there are some drawbacks to these pulping machines. For example, a pulper machine with a

© The Authors, published by EDP Sciences. This is an open access article distributed under the terms of the Creative Commons Attribution License 4.0 (https://creativecommons.org/licenses/by/4.0/).

large construction is not possible to peel in the coffee harvesting area. The problem that forms the basis of this research is related to the process of stripping the coffee skin. So far, the coffee peeling process has been carried out using semi-mechanized coffee peeling machines and conventional peeling machines with engines.

The problem when using semi-mechanized pulper machines is the low working capacity of the machine in a unit of time. A conventional pulper machine with engines has a large construction and is not movable, so farmers need to transport harvested coffee cherries to the peeling location. Semi-mechanized coffee pulper machine with a drive in the form of human power can only peel about 10-15 kg/hour, while conventional 16 HP diesel-driven coffee pulper machines has a working capacity of 900 kg/hour [3]. After harvesting, farmers often delay post-harvest handling of the harvested coffee. This is due to the use of semi-mechanized pulper machines with a working capacity that is not proportional to the quantity of crops and machines. Ripe cherries should be harvested immediately and post-harvest handling carried out, given that delays in harvesting and post-harvest handling cause a significant decrease in the quality of coffee beans [4].

To overcome this problem, a coffee peeling machine with mobility and easy operation such as a mobile pulper machine is needed. The mobile pulper is expected to be used directly in the coffee harvesting area. Peeling coffee in the coffee harvesting area can streamline time and energy in post-harvest handling. Given that about 60% of the weight of the coffee cherries is contained in the coffee pulp.

1.2 Aim and Purpose

The purpose of this research is to design and build a prototype of a mobile wet coffee peeling machine (pulper) that can be applied directly to coffee plantations. The usefulness of this research is to produce practical solutions to problems that are often experienced by coffee farmers in post-harvest processing of coffee. The problem is the difficulty of mobilizing the harvest from the harvesting area to the peeling location.

1.3 Research Boundaries

The research boundaries in this study are as follows:
1. The engine used is a Honda Astrea Grand motorbike engine produced in 1996.
2. The frame used is the default Honda Astrea Grand frame which has been modified into a motorbike for transporting agricultural products (unhulled rice).
3. The peeling unit used is a commercially available peeling unit, the RICHI K-15 made in China.

2 Research Methods

2.1 Time and place

This research was conducted in November 2022 – February 2023, at Workshop Engineering Laboratory and Processing Laboratory, Agricultural Engineering Study Programme, Department of Agricultural Technology, Faculty of Agriculture, Hasanuddin University, Makassar.

2.2 Tools and materials

The tools used in this research are basic tools, namely welding machines, grinding machines, drilling machines, basic measuring instruments, tachometers and stationery. The materials needed in this research include motorcycle units, 19 mm shaft iron, 5 mm iron pipe with a diameter of 3.5 in, 2 mm iron pipe with a diameter of 1 in, 5 mm plate iron, 1.5 x 3 cm hollow iron, pulley and belt, pulper unit, bearing, fuel and coffee cherries.

2.3 Research Procedures

In this research, there are several stages that are carried out. Before the design, a design analysis is first carried out. The analysis begins with determining the capacity of the machine for one filling. From the determination of the capacity, the speed and dimensions of the pulley to be used can be determined. The results of the design analysis are then used in determining the dimensions.

2.3.1 Design Concept

Basically, this research was carried out by modifying some of the components that are already available and making components that are not yet available in the market. This research is divided into 3 main parts, namely the drive unit, transmission unit and peeler unit. The drive unit uses a modified motorcycle unit and the peeling unit uses a pulper unit that is available on the market and then modified some parts, such as the hopper seat, pulley and gear position, output channel and bearings.

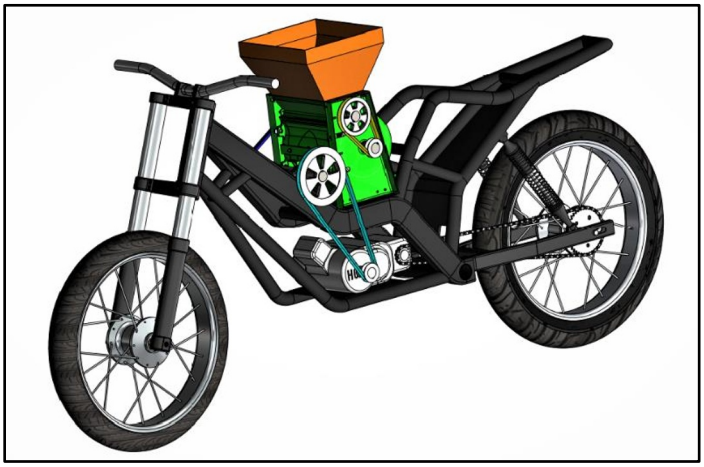

Fig. 1. Preliminary design of mobile coffee pulper machine.

The concept of stripping using a mobile pulper machine is to utilize the power of a motorcycle engine. Stripping can be adjusted as needed such as setting the stripping gap and rotation speed by adjusting the throttle or gas opening. The mobility of the pulper is supported by the main function of the motorcycle. The pulper will be able to be carried everywhere without having to use a truck or transport car. The hopper section can be removed so as not to obstruct the operator's view while riding the motorcycle.

2.3.2 Design Analysis

The design analysis starts from determining the hopper capacity by calculating the density of fresh coffee cherries and determining the hopper volume. From determining the volume of the hopper, several dimensions of the parts to be made will be obtained.

The analysis in question:

1. Characteristic of coffee

In the preliminary research that has been done, the density of coffee cherries is 527.48 kg/m^3. The value of the density of coffee cherries is the basis for determining the capacity of the planned hopper.

2. Determination of hopper dimensions and actual machine capacity

The dimensions of the hopper are determined based on the capacity for one filling. The dimensions can be calculated using the equation: [5]

$$V = \frac{m}{\rho} \quad (1)$$

Descriptions V hopper total volume (m^3), m coffee cherries mass (kg), ρ density of coffee cherries (kg/m^3) = 527,48 kg/m^3.

If the planned hopper is in the form of a truncated prism, then the volume of the truncated prism calculated by the equation: [6]

$$V = \frac{1}{3} h \left(A_1 + A_2 + \sqrt{(A_1 + A_2)}\right) \quad (2)$$

Descriptions V volume (m^3), A_1 hopper top opening area (m^2), A_2 hopper bottom opening area (m^2).

Work capacity (K) is the ability of the machine to perform a function on the test material (Wp in mass units)/time (t) which can be calculated by the following equation [5]

$$K = \frac{Wp}{t} \quad (3)$$

3. Determination of torque and pulley diameter

The pulley diameter is determined based on the rotation speed ratio between the two shafts. To find out the diameter of the driven pulley can use the equation: [7]

$$d_2 = \frac{n_1 . d_1}{n_2} \quad (4)$$

Descriptions n_1 drive shaft rotation (RPM), n_2 driven shaft rotation (RPM), d_1 *driver pulley* diameter (mm), d_2 *driven pulley* diameter (mm).

The torque on a drive and driven shaft can be calculated using the equation: [8]

$$T = 9549 \frac{P}{n} \quad (5)$$

and

$$T = \frac{60000}{\pi \times 2} \times \frac{Pd}{n} \quad (6)$$

Descriptions T torque on the shaft (Nm), P engine power (HP), Pd power plan (kW), n shaft rotation speed (RPM).

To find out the torque of the driven pulley shaft, it is necessary to calculate the power plan using the equation: [7]

$$Pd = Fc \times P \quad (7)$$

Description Pd power plan (kW), Fc factor correction (a bit of a shock: 1,0 – 1,5), P engine power (W).

2.3.3 Functional Design

The working mechanism of this mobile coffee pulper machine occurs in several series of coffee skin stripping systems with different bean and skin output channels. This pulper machine is expected to be moved and used directly at the coffee harvesting site.

2.3.4 Structural Design

In the structural design, the model, dimensions and type of materials used are determined. The determination of these dimensions and types of materials can be directly determined in the design process but beforehand, the best type of material to be used in the design is taken into account. Determination of the type of material is done by testing the planned material in several ways, namely testing cracks, strains and faults and paying attention to the availability of materials in the market and cost availability.

2.3.5 Testing Method

In this research, it is necessary to have several test models, namely testing without materials, testing with materials and testing pulper mobility.

a. Testing without material

Testing without test material is carried out to observe the speed of each shaft, namely the engine shaft on the shaft extender, the peeling cylinder shaft and the metering device. Measurement of shaft rotation speed is done by turning on the engine and then measuring the shaft speed using a tachometer. The RPM value obtained is then used as a comparison when the shaft speed is calculated based on the pulley ratio using equation 5. This comparison value will be the slip value that occurs in the power transmission. The success indicator in this test is that the motorbike engine can move the peeler roller and metering device.

b. Testing with materials

Testing with test materials was carried out to observe the ability of the peeling machine to peel coffee cherries. The test material used was arabica coffee cherries from Bantaeng Regency. The coffee cherries used was picked using the select harvest method and then sorted using the rambang method to separate damaged cherries floating on the surface of the water.

The test was carried out by putting the coffee cherries into the hopper of the peeling machine that had been mounted on the motorbike frame in the condition of the engine running. When the machine is operating, the parameters measured are the rotation speed of the engine shaft and the peeling cylinder. After the test, the weight of the peeled beans, skin, unpeeled cherries and damaged beans due to rupture during peeling or due to physical conditions before peeling were measured. Broken coffee beans are characterised by the sharp corners of the fragments while damaged coffee beans caused by disease are characterised by the spongy, hollow shape of the beans and have a darker horn skin colour.

The success indicator in the test with materials is that the coffee cherries that is peeled after the peeling process is at least 95% of the total sample. Broken coffee beans after the stripping process is a maximum of 2% (excluding broken coffee beans caused by disease or physical condition of the coffee beans). If there are coffee cherriess that are not peeled or broken coffee beans that do not meet the success indicators, then adjust the gap width of the peeler roller and the peeler wall.

c. Pulper mobility test

Pulper mobility testing is carried out to observe the feasibility of the pulper machine when driving or driving mode. Testing is done by driving the pulper machine but first removing the hopper so as not to block the driver's view. Pulper machines are driven on paved roads and dirt roads The indicator of success in this test is that when driving a motorbike, the

pulper unit does not block the driver's view. The motorcycle can manoeuvre normally like a normal motorcycle. The maximum turning degree of the steering wheel is 45°-50°.

3 Results and Discussion

The mobile pulper machine is the result of research that is expected to be a solution to the problems experienced by coffee farmers, especially in Bantaeng Regency. The advantages of a mobile pulper machine are that it can be used to peel coffee directly at the coffee field, can be moved easily so that it can reach distant peeling locations, the hopper on the pulper can be disassembled easily without using certain equipment and this mobile pulper machine can still be used as a vehicle for transporting agricultural products.

The mobile pulper is shown in Figure 2 below:

Fig. 2. Prototype of the mobile pulper machine.

The mobile pulper machine is built on the basis of an Astrea Grand motorcycle that has been modified on the frame to support agricultural purposes such as the transportation of agricultural products. In the transmission system, a shaft extender is also being installed to transmit power from the engine to the peeling machine. Modifications that have been made to the peeling machine are a knockdown hopper system without using additional tools, and the manufacturing of output channels for coffee beans and cascara.

Functionally, the mobile pulper machine can peel 205 kg/hour of coffee cherries and requires 0.72 L/hour of fuel with a rotation speed on the peeling cylinder of 204 RPM and on the engine of 1289 RPM. A human powered semi-mechanized coffee peeling machines are only able to peel 10-15 kg/h of coffee cherries, while conventional coffee peeling machines powered by 4 HP engines can peel 190 kg/h of coffee cherries and require 1 L/hour of fuel with an average peeling cylinder rotational speed of 110 RPM.

3.1 3D Design and Prototype

In 3D design creation, first a 2D or 3D sketch is made at a certain viewing angle, then developed with special commands to form a solid object. The dimensions of each part are determined during wireframe sketching. The dimensions include determining the length and width of the part as well as the dimensions of the cuts or holes contained in the part.

Figures 3 below show the 3D design model of the mobile pulper machine.

Fig. 3. 3D design of mobile pulper machine.

The 3D design became a reference in making the prototype of the mobile coffee pulper machine. However, there are some differences and changes between the design and the resulting prototype. These differences and changes are based on the availability of materials on the market, cost limitations and suitability to the needs.

3.2 Functional Design

The main function of the mobile pulper machine is to peel coffee at the location of coffee harvesting or easy mobilisation of the pulper machine. The working mechanism of this mobile pulper machine occurs in a series of working systems that are expected to be able to peel coffee by separating the coffee beans from the skin using the rotating power transmitted from the motorbike engine unit.

Figure 4 below is a chart that explains the function of a mobile coffee pulper machine which is supported by several sub-functions and becomes a mutually supportive unit.

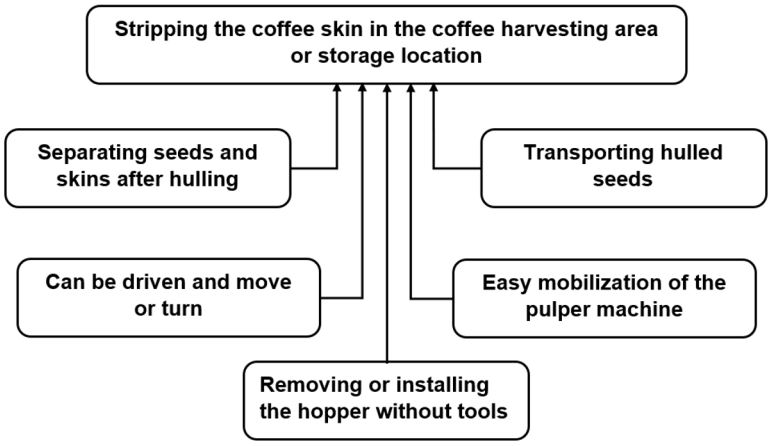

Fig. 4. Functional chart of mobile pulper machine.

3.2.1 Mobilization System

In this research, the mobilization system or drive unit used is a motorbike unit with some modifications that are commonly used in the transport of agricultural products. The drive unit includes the engine, frame and other parts that support the mobilisation of the mobile pulper machine. The engine of the drive unit functions as a source of rotating power that will be transmitted to the peeler unit. In addition, the engine can also be used as a rotary power to mobilise the pulper machine like a motorcycle unit in general.

The frame used in the mobile pulper machine is a motorcycle frame with some modifications made which functions as a pulper unit holder and supports the entire mobile pulper machine unit. Modifications are made to increase rigidity and provide space that fits the pulper unit. The other parts of the drive unit function like a motorbike unit in general and support the mobility of the pulper.

3.2.2 Power Source and Transmission System

The transmission unit on the mobile pulper machine functions to forward power from the engine to the peeling unit. In the transmission unit, the most basic thing is the manufacture of shaft extenders. Shaft extender is attached to the flywheel cover found on the engine. The additional shaft on the shaft extender is directly connected to the crankshaft which binds the magnetic style wheel. The additional shaft on the shaft extender is then attached to a pulley and transmits power from the engine to the peeler unit through a pulley and belt type transmission attached to the peeler cylinder shaft.

3.2.3 Peeling Unit

The peeling unit consists of several parts, namely the hopper, metering device, peeling cylinder, peeling wall (stator), pulper wall and output channel for coffee beans and skin. Basically, the peeling unit is the main unit that functions to peel and separate coffee beans and skin. The hopper on the peeler unit uses a knockdown mechanism to facilitate the mobilisation of the mobile pulper machine. When stripping will be carried out, the hopper will be installed without using additional tools in the form of turning tolls or the like and will be removed when the mobile pulper machine will be moved.

3.3 Structural Design

In the design of a mobile coffee pulper, structural design is carried out with reference to the function of each component. In addition, the structural design determines the model and dimensions that refer to the design analysis and still considers the cost and availability of raw materials in the market.

3.3.1 Mobilization System

The mobilization system or also known as drive unit used in this research is a modified Honda Astrea Grand motorbike unit produced in 1996. The most significant modification was made to the motorbike frame so that it could transport heavy loads such as agricultural products such as grain, onions, vegetables and other plantation commodities.

Figure 5 below is a sketch of the drive unit after modification.

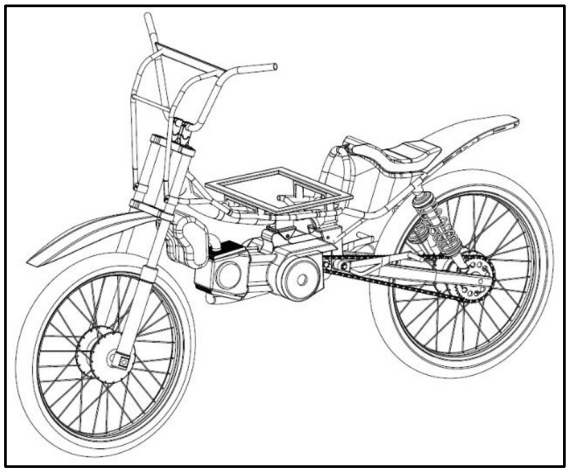

Fig. 5. Sketch of frame after modification.

The engine used in this research is a Honda Astrea Grand 4-stroke single-cylinder 110 cc motorcycle engine with a maximum power of 7.3 HP, max. rotation around 9000 RPM and idle rotation around 1200 RPM. The selection of this engine is based on field observations which show that coffee peeling machines with petrol motor resources available today use combustion motors with power ranging from 4-8 HP. Therefore, the selection of a motorbike engine is very possible to be used as a source of rotating power for the coffee peeling machine.

The sketch in Figure 6 below is a sketch of the frame used in the mobile pulper machine which is taken from the built-in frame of a Honda Astrea Grand motorbike which is made of iron with modifications to fit the peeler unit to be used. The total width of the frame is 280 mm and further becomes the basis for selecting the pulper unit. Modified frame as shown in Figure 6 are often used for transporting agricultural products such as grain, cocoa, coffee and other commodities. This frame modification can carry loads ranging from 100-200 kg including the weight of the driver.

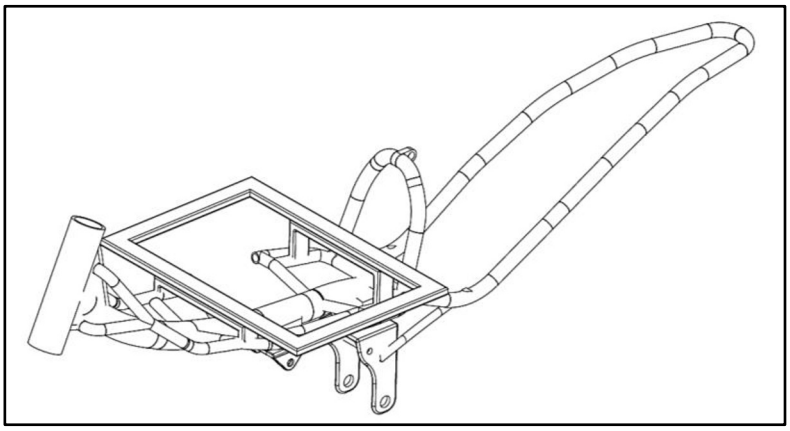

Fig. 6. Modified frame.

3.3.2 Power Source and Transmission System

The transmission system in a mobile coffee pulper occurs in several transmission circuits. In the mobile pulper machine transmission system, a shaft extender is used as an additional shaft. Figure 7 below is a sketch of the shaft extender. Shaft extender is made using iron plates and pipes with a thickness of 5 mm each. The iron pipe and plate are glued together using a welding machine. On the shaft extender there are additional shafts, 2 bearings and additional inner bearings. The additional shaft used is made of iron shaft with a diameter of 19 mm. Each component dimension on the shaft extender is adjusted to the engine crankshaft diameter and the diameter of the gap in the flywheel so as not to affect the working system on the flywheel.

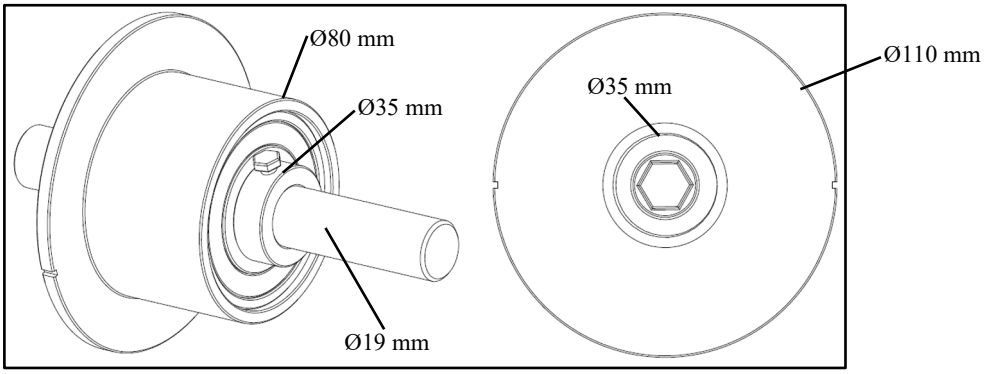

Fig. 7. Shaft Extender.

Power transmission from the engine through the extender shaft to the peeler roller uses a pulley and belt type transmission with a distance between the two shaft centres of 46 cm. The pulley ratio used is 4: 1 with a pulley size on the peeler roller shaft of 12 "and on the shaft extender shaft of 3" and the type of belt used is A-59 type v-belt, where A is the size of the width and thickness of the belt, while 59 is the inner circumference of the belt in inches. The selection of a larger pulley ratio will have an impact on the occurrence of more slips on the extender shaft pulley when the engine is operating because the larger the pulley ratio, the smaller the contact area between the extender shaft pulley and the v belt.

The transmission system on the mobile coffee peeling machine (pulper) can be seen in Figure 8 below:

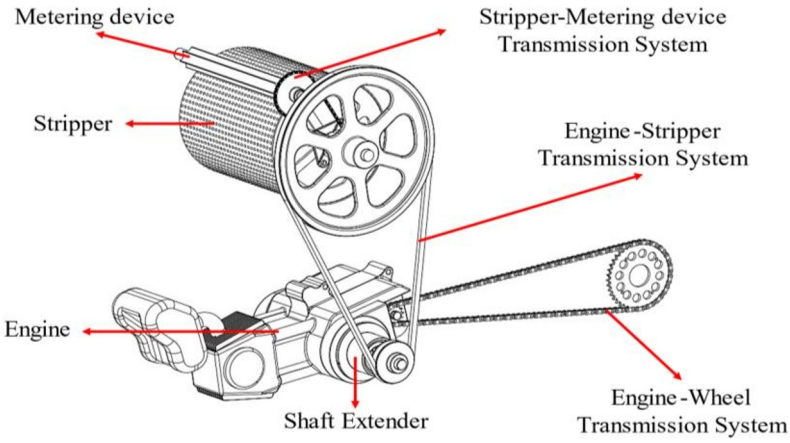

Fig. 8. Transmission system of mobile pulper machine.

3.3.3 Peeling Unit

In this research, the peeling unit used is a peeling machine that is already available on the market. This is intended to facilitate machine calibration. The peeling machine chosen is the RICHI brand peeling machine type K15 made in China. The selection of pulper units is based on the availability of pulper units that match the specifications and costs that are fairly affordable. This RICHI K-15 pulper machine can use a power source from a combustion motor or electricity and can also use human power.

Figure 9 below is a sketch of the peeling unit on the mobile pulper:

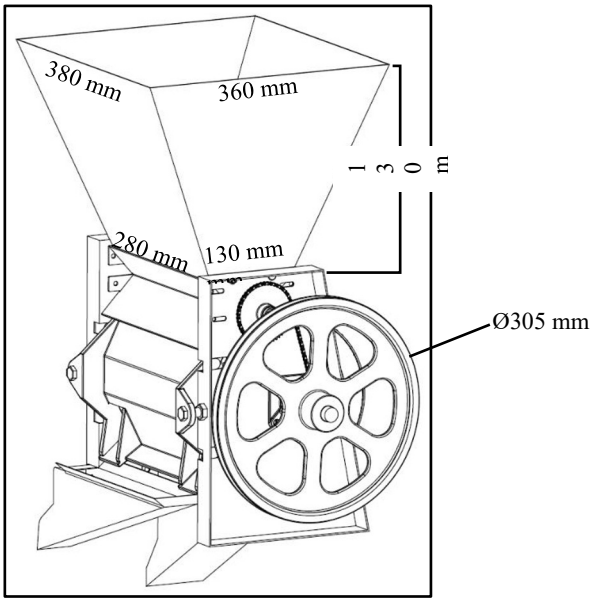

Fig. 9. RICHI K-15 Peeler Unit.

In preliminary research that has been done, it is known that the density of coffee cherries is 527.48 Kg/m^3. The hopper on the RICHI K-15 peeling machine has a one-time filling capacity of 15 Kg so that it is known that the actual hopper volume is 0.028 m^3 if calculated with equation 1. The top and bottom opening areas of the hopper are 0.1368 m^2 and 0.04675 m^2 respectively with a height of 28 cm calculated with equation 2. This hopper has been modified with a knockdown mechanism to make it easier to remove the hopper without having to use additional tools.

The RICHI K-15 pulper unit is not equipped with an output chute for seeds and skins, so a 0.8 mm thick plate iron output chute was made due to the availability of materials and related to cost limitations. The output chute is adapted to the available space so that the seeds and skins are directed to the right side of the mobile pulper. The seed output chute cannot be directed to the left side because it will block the transmission unit from the engine to the peeling cylinder.

3.4 Testing Result

3.4.1 Test without Material

In the test without material, a test was carried out by turning on the engine and then measuring the rotation of the engine and peeling cylinder using a Tachometer. On the extender shaft,

the rotation obtained is 1595 and on the peeling cylinder shaft is 279 RPM. If the peeling cylinder speed is calculated by equation 4, the peeling cylinder speed is 399 RPM, so it is concluded that there is a 30% slip.

3.4.2 Test with Materials

In the test with materials, the coffee cherries used was 12 kg of arabica coffee cherries and the peeling lasted 210 seconds. The peeled coffee was 98.7% and produced 5.93 kg of whole coffee beans and 5.9 kg of skins with a fuel consumption of 42 ml. In addition, there were 0.069 kg (0.6%) of damaged beans and 0.7% of the total sample or 0.084 kg were unpeeled cherriess. In addition to coffee beans broken due to friction on the peeling cylinder, there are beans with damaged physical conditions that may be caused by disease with a dark grey appearance with a soft texture. If there are coffee beans that come out through the skin output channel, it is because the gap between the wall and the peeling cylinder is wider than the coffee beans, so it is necessary to adjust the density.

(a) **(b)**

Fig. 10. Coffee bean (a) and cascara (b) peeling results (without sorting).

From the test results with the material, the engine shaft rotation speed is 1289 RPM and the peeling cylinder is 204 RPM measured using a tachometer. If the rotation speed is calculated by equation 4, the speed of the peeling cylinder is 322 RPM, so it is concluded that there is a 36% slip. In preliminary research that has been done, an effective rotation speed for pulping is 110 RPM. This is in accordance with the research of Sodik (2017) which compares several rotational speeds of the peeling cylinder and concludes that the most effective rotational speed is 110 RPM [9] It is known that the rotation of the peeling cylinder on the mobile pulper machine is relatively larger than the conventional peeler. This affects the amount of rationing from the metering device and causes the accumulation of seeds and skins in the output channel. This build-up causes the seeds to come out along with the skins.

The mismatch in rotation speed is due to the inappropriate rotation ratio and pulley. The use of a larger pulley ratio will reduce the contact area on the engine pulley, causing more slip between the pulley and belt. This is in accordance with the statement of Krishadiatno (2015) that slip in pulley and belt transmission can occur if there is a mismatch in the speed and pulley ratio on both shafts. The use of different ratios has a different cross-sectional area or contact area on both pulleys and a 1: 1 ratio has the same contact area [8]

Despite these drawbacks, the mobile pulper works functionally in the coffee pulping process and is capable of pulping 205 kg/hour of coffee cherries if calculated with equation 3. Each peeling that lasts for 1 hour requires 0.72 litres of fuel or 3.5 ml/kg of coffee cherries. Based on research conducted by Nurudin (2014), coffee peeling using a semi-mechanical

pulper lasting for 1 hour is only able to peel 10-20 kg of coffee cherries and when using a conventional peeling machine with a diesel motor drive is able to peel 450-500 kg/hour of coffee cherries [3] But of course, the construction of a coffee peeling machine with a diesel motor is very large and cannot be moved at all. According to Wiranata (2021), a conventional coffee peeling machine with a rotating power of 4 HP petrol motor can peel 190 kg/hour of coffee cherries and requires 1 litre of fuel [5] Apart from being static, conventional coffee peeling machines with petrol motors also require more time and cost when compared to mobile coffee peeling machines.

3.4.3 Mobility Pulper Test

It was concluded that the peeler unit does not obstruct and does not interfere with the driving position and can manoeuvre like a conventional motorcycle, the steering wheel can be deflected and not blocked by the peeler unit. The average speed of the mobile pulper is 65 km/h for paved roads and 30 km/h for dirt roads.

The problem during mobility testing is that when the hopper is removed and the mobile pulper will be driven, there is no space to put the hopper so a tray or basket needs to be added behind the driver.

4 Conclusions

After testing the research on the Design of Mobile Coffee Peeling Machine (Pulper), it was concluded that coffee peeling using a mobile pulper machine met the specified success indicators. In testing using a sample of 12 kg of arabica coffee cherries, the peeled cherries produced 98.7% where there were 5.93 kg of whole coffee beans, 5.9 kg of skin (pulp), 0.069 kg of non-intact beans and 0.084 kg of unpeeled cherries. The peeling test took place at an engine speed of 1289 RPM and a peeling cylinder speed of 204 RPM and was able to peel 205 kg of coffee cherries/hour with a fuel consumption of 0.72 litres/hour. The installed peeler unit does not interfere with the functional drive unit so that the operator can drive the mobile pulper machine without interference and is considered to be used in coffee plantation areas.

References

1. Ditjenbun. Statistik Perkebunan Unggulan Nasional 2020-2022. Direktorat Jenderal Perkebunan (2022)
2. BPS. Statistik Kopi Indonesia 2021. Badan Pusat Statistik (2022)
3. R. Nurudin, Rancang Bangun Mesin Pengupas Kulit Kopi. J. Rekayasa Mesin, **1** (2014)
4. Permentan. *Pedoman Teknis Budidaya Kopi yang Baik*. Kementrian Pertanian (2014)
5. TE. Wiranata, R.Sumiati, Rakiman, Y. Yuli, Design of A Coffee Pulper Machine Using An Electric Motor. J. Teknik Pertanian Lampung **10** (2021)
6. MN. Kholis, A. Majid. dan Suhariyanto, Rancang Mesin Pengupas Kopi. Institut Teknologi Sepuluh Nopember (2017)
7. Misar, Sudarsono, Samhuddin, Perencanaan dan Simulasi Poros Roda Traktor Tangan. J. Ilmiah Mahasiswa Teknik Mesin **3** (2018)
8. Krishadiatno, AW. 2015. Perencanaan Sistem Transmisi Mesin Pencacah Tebo Jagung Berkapasitas 200 Kg/Jam. *Thesis* (2015)

9. A. Sodik, K. Suharno, S. Widodo, Perancangan Mesin Pengupas Kopi dengan Menggunakan Dua Rol Pengupas. Wahana Ilmuwan **1** (2017)
10. R. Nurudin, Rancang Bangun Mesin Pengupas Kulit Kopi. J. Rekayasa Mesin **1** (2014)