Comparison of ultrasonic and GPR methods for investigation of reinforced concrete columns

Alexander N. Shuvalov[1], *Andrey E.* Lapshinov[1], *Rinat R.* Zheletdinov[1] and Evgenij O. Zerkal'[1].

[1]National Research Moscow State University of Civil Engineering, 129337, Moscow, Russia

Abstract. The presence of internal concreting defects such as pores, cavities, sinks, in load-bearing vertical structures can lead to serious consequences, up to accidents. In this regard, it is especially important to identify such defects is an important and relevant task during surveys of load-bearing structures of buildings and structures. At the same time, the search for internal defects is complicated by the fact that they may not be visible on the surface, but may be present in the body of structures. In order to control the quality of the erected monolithic structures, their instrumental examination is carried out with the identification of the possible presence of internal defects by the method of through ultrasonic sounding. The article discusses the comparison of ultrasonic and GPR methods for searching for internal defects in concreting reinforced concrete columns. The studies were carried out on real construction sites in which there were suspicions of internal defects in concreting of high columns. Conclusions are drawn about the possibilities and limitations of the methods. The resolution limits of the methods are presented. The results of the conducted studies show that, despite the relative modern popularity of ground-penetrating radar, ultrasonic methods can work equally well in this type of specific research scenario and have shown a high potential to overcome some inherent limitations of ground-penetrating radar when working with saturated reinforcement.

1 Introduction

The use of geophysical methods not only for engineering investigations of foundation soils, but also for the inspection of reinforced concrete structures has increased in recent years [1-4]. Using a private geophysical method, GPR, it is possible to find internal concreting defects such as cold concreting joints [5,6], double row reinforcement of structures [7] and even composite polymer reinforcement [8]. Nevertheless, the wider use of GPR for inspection and defectoscopy purposes is hampered by the near absence of a regulatory framework for such surveys. GOST 31937 "Rules of technical condition inspection" does not contain any guidelines or rules for inspection of structures by GPR. At the same time, new technologies of subsurface holographic GPRs realising microwave methods for non-destructive testing of various kinds of materials and structures [9], including composite ones [10], are also known.

[1] Corresponding author: LapshinovAE@mgsu.ru

At the same time, the use of ultrasound for quality control and defectoscopy of reinforced concrete structures has been known for quite a long time [11]. In addition to traditional ultrasonic methods for quality control and defectoscopy of building structures of buildings and structures for various purposes, ultrasonic tomographs [12] and vibroacoustic methods [13] are also used. The disadvantages of the ultrasonic method include relatively low speed of work and lack of visualisation of the results. GPR methods, on the contrary, allow to obtain data on the structure of structures and the presence of various anomalies in it with high speed and clear visualisation. However, both of these methods are indirect and cannot be used directly, without verification of the data obtained by direct method or by linking to a calibration relationship.

2 Methods

It should be noted that the joint use of ultrasonic and GPR methods to search for defects in load-bearing structures was known earlier [14,15], but the number of such works is small, so it is of interest to further develop such works.

For the purpose of comparative analysis of the mentioned methods, a study of the mentioned ultrasonic and GPR methods on an existing capital construction site was carried out.

The use of ultrasonic testing (UT) and GPR methods was performed at the building site of capital construction. The object of the exploration were monolithic reinforced concrete columns with a height of more than 7 meters of circular cross-section Ø580 mm, reinforced with the main working reinforcement Ø32 mm of class A500, and transverse reinforcement Ø12 mm of class A240 with a spacing of 100 mm at the base of the columns at a height of 1.2 meters and a spacing of 200 mm in the central zone of the columns. The cross-section of the columns and reinforcement is shown in Figure 1.

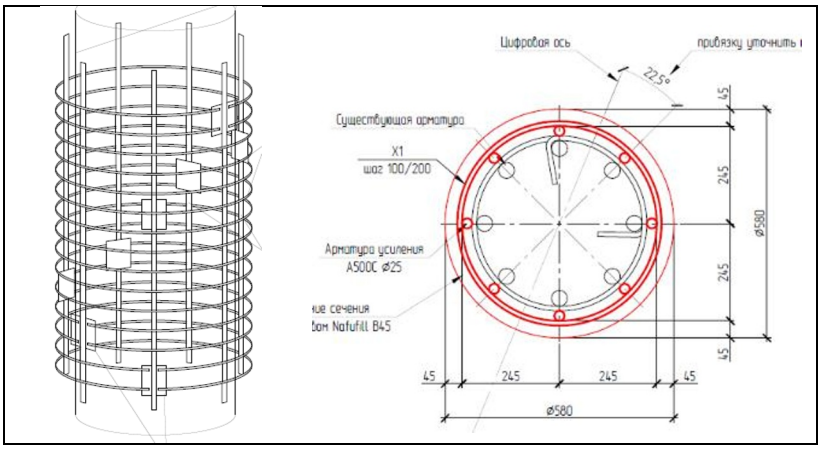

Fig. 1. The cross-section of the columns and reinforcement.

The objectives of the study were to detect internal defects in the form of pores and caverns in the body of reinforced concrete structures by non-destructive methods and to confirm the results of surveys by taking a concrete sample in the area of possible defect location.

To fulfill this task, it was decided to use in parallel the method of ultrasonic defectoscopy and georadiolocation profiling. GPR profiling was carried out along the columns from bottom to top, with a scanning step of 150-200 mm. Transverse ultrasonic examination was carried out along the pre-marked cells, in places free of reinforcing bars.

2.1 Ultrasonic methods

The ultrasonic method is based on recording the velocity of ultrasonic waves in the medium under study. The speed of ultrasonic wave passage depends on the density of the material. The higher the density, the faster the speed, and vice versa, the lower the density, the slower the speed. For example, for normal concrete of class B40 the speed of ultrasonic wave propagation is from 3500 to 4000 m/s. In metal structures - from 4800 to 5000 m/s.
By comparing the wave propagation velocity in different areas, it is possible to indirectly localize areas with internal defects, such as caverns or pores.

There are two main methods of testing.

2.1.1 Method of surface sounding

Method of surface sounding - where the receiver and transmitter are installed on the surface of the structure, which allows you to determine the speed of the ultrasonic wave at a certain installed base (base - the distance from the transmitter and receiver), usually it is 120 mm. When using this method, the ultrasonic wave travels closer to the outer surface of the structure.

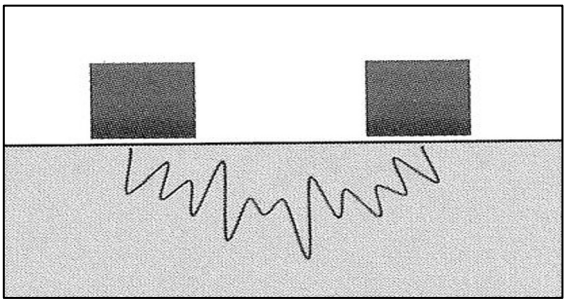

Fig.2. Surface ultrasonic sounding

2.1.2 The method of through sounding

The method of through sounding is based on the location of the transducers against each other, which allows to estimate the speed of ultrasonic wave traveling through the entire thickness of the inspected structure. This method is more rational for determining internal defects in concrete structures, since ultrasonic waves travel a path equal to the thickness of the inspected structure and allow to determine the continuity of concrete over the entire thickness of the structure.

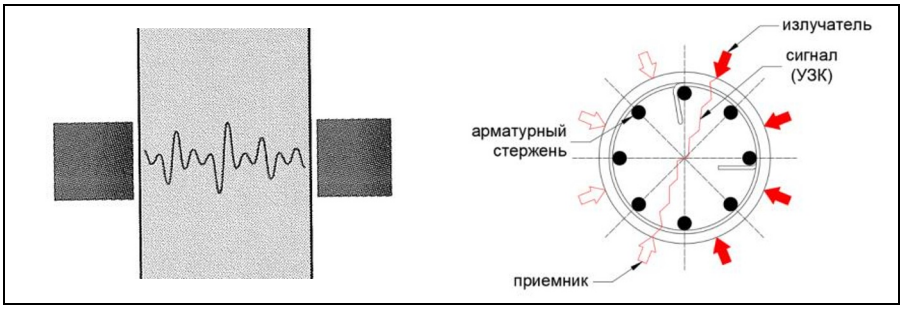

Fig. 3. Through ultrasonic sounding

Prior to ultrasonic testing, it is mandatory to carry out preparatory work, which includes:

- Determination of the location of the reinforcement bars, e.g. by electromagnetic induction;
- Preparing the surface of the structure to be tested, i.e. scraping the area of the structure to form a flat and even surface to ensure good contact between the transducer and the surface. Often, to ensure the best contact between the sensor and the surface, adhesive compounds such as lithol are applied to the surface or to the sensor itself.

Transverse sounding is carried out on two mutually parallel planes (sides) of the column. The transducers on both sides should be placed mirror to each other between the reinforcing bars in the direction perpendicular to the direction of the working reinforcement.

The results of this method are the values of the velocity of the ultrasonic wave, which are subsequently recorded in the memory of the device. After that the results are processed and the results are given in tabular and graphical form.

2.2 GPR methods

GPR method is based on the excitation and reception of electromagnetic waves reflected from the boundaries of interfaces between layers of the medium or objects with contrasting electrophysical properties. When performing field measurements with GPR, the double travel time of the sounding signal (the time required for the sounding signal to travel from the source to the reflecting surface and return to the receiver) and the amplitude of the received reflected sounding signal are determined.

In the case of searching for defects in concrete structures, the main indicator is the deviation of dielectric properties calculated from the time of arrival of the reflection from the concrete-air boundary. Negative values of dielectric permittivity are associated with an increase in volume porosity, positive values on the contrary - with a decrease in volume porosity.

An important physical quantity is the dielectric permittivity of the elements of the investigated medium, on which the speed of propagation of electromagnetic waves in the medium depends.

As a result of field GPR observations, the wave pattern is a sequence of records of signals received by the antenna in the time interval from the emission of the sounding pulse to the end of the record length.

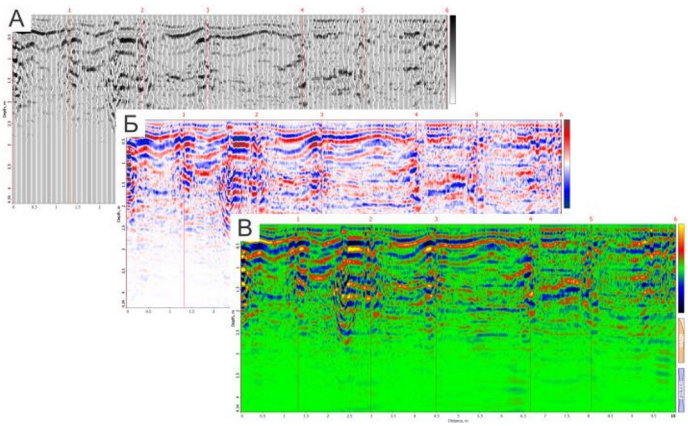

Fig. 4. Different methods of representing amplitudes on radarograms: A - representation of amplitudes by deviation method with blackening of positive amplitudes (deviations to the right); Б - representation of amplitudes by variable density method (blue-red with transition through white color scale); B - representation of amplitudes by variable density method with alternative color scale.

Representation of electromagnetic wave amplitudes on radarograms can be done in several ways:

- Representation of amplitudes by deviations, that is, the greater the amplitude of the signal, the greater the deviation of the trace from the zero position;
- Image by variable density method, i.e. when zero signal amplitude corresponds to one color, positive amplitudes correspond to the second color, and negative signal amplitudes correspond to the third color.

Reflective boundaries on radarograms are represented not by a single phase of the electromagnetic wave, but by several, which is determined by the shape of the probing signal.

When analyzing the data from the GPR survey, the travel time of the wave from the observation point to the reflection point and back is measured, and the depth is calculated using the formula:

$$H = \frac{t}{2} V_{\text{cp}} \quad (1)$$

$$V_{\text{cp}} = \frac{c}{\sqrt{\varepsilon}} \quad (2)$$

where t - is the measured time, V - is the velocity of electromagnetic wave propagation in the medium on the interval from the observation point to the reflection point, c - is the speed of light in vacuum, ε is the dielectric constant of the medium.

3 Results

According to the results of the work carried out by the ultrasonic scanning method, areas were found where the average ultrasonic wave velocity is 2400 meters per second, which is 52% less than the normal ultrasonic wave velocity for the structures under investigation. To confirm the ultrasonic wave velocity results, RGP scanning was also conducted on the same section. According to the results of the survey, the deviation of dielectric permittivity at the site is minus 22%, which also confirms the presence of internal defects in the form of pores, caverns or voids.

In the course of the research the following regularity was revealed. The value of ultrasonic wave propagation velocity in the studied columns varied from ~2100 to ~5900 m/s. At the locations of suspected defects, the ultrasonic wave propagation velocity ranged from ~2200 to ~3100 m/s, which was 40-50% lower than the overall average value of 4200-4600 m/s. This pattern was encountered on almost all of the investigated structures.

It was concluded that if the ultrasonic wave propagation velocity in a section dropped by more than 40% of the average reading for the entire structure, the section was considered defective, and the section was further investigated by GPR profiling and concrete sampling.

To validate the indirect methods, control drilling of concrete samples was performed on the areas with positive and negative readings. When analyzing the presence of defects, a correlation was found between the readings and the presence of defects. The comparative analysis is presented in Table 1.

Table 1. Relationship between indications and defects

Visual inspection results			
Ultrasonic velocity	4100 m/s	3650 m/s	2400 m/s
Deviation of dielectric properties	-5% / +3% ~-0,2 единицы	-10% / -15% -0,6 единиц	-22% / -19% - 1,2 единцы

The final conclusion about the presence of internal defects in reinforced concrete columns was based on the validation of the results of GPR, ultrasonic and in-situ method. The ultrasonic wave velocity and dielectric constant deviation were compared. The processing results of the two methods are presented in Table 2.

Table 2. Comparison of ultrasonic sounding and GPR method.

Ultrasonic, m/s	Columns	Visualization GPR
4670		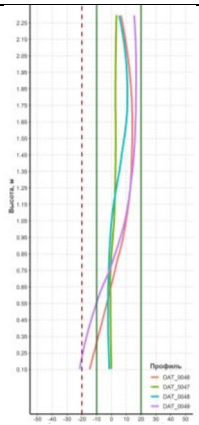
4661		
4570		
4884		
4522		
4472		
4633		
4705		
4105		
2985		
2417		

According to the processing results, it can be seen that in the zone of lower values of ultrasonic wave (2417-2985 m/s) the deviation of dielectric permittivity by 20% (-1.2 units) was recorded. In the areas with average readings equal to ~4500 m/s, the deviation of dielectric permittivity is not more than 5%.

According to the results of the work performed, the following conclusions can be drawn:

- When combining the two methods of nondestructive testing, it is possible to obtain sufficient data, the results of which can be used to judge the presence of internal defects and damage;
- The method of georadiolocation profiling allows to carry out works faster, however it is necessary to carry out additional processing of the received data;
- When using the method of ultrasonic through-sounding it is possible to analyze the readings in real time, estimating the speed of ultrasonic waves propagation relative to the average readings.

4 Discussion

According to the results of the study, both methods have good convergence, which is confirmed by the results of visual examination of concrete samples taken from the structures.

In the course of this work, the method of ultrasonic examination revealed the following number of drawbacks complicating and delaying the research:

- The need to determine the location of reinforcing bars in the inspected structures;
- Preparation of the surface before conducting the research;
- Requires comprehensive access to be able to install the sensors opposite each other;
- Little visualization of the results obtained.

The disadvantages of the GPR method are only the complexity of processing the obtained results. The GPR method allows to quickly carry out surveys and provide good visualization of the obtained data.

5 Conclusions

1. GPR can be successfully used to detect internal defects in concreting.
2. Despite the success of this method, it is an indirect method and requires confirmation by direct research methods to verify the results.

References

1. Lozovsky I., Churkin A., Zhostkov R. NUMERICAL SIMULATION OF ULTRASONIC PILE INTEGRITY TESTING Russian Journal of Nondestructive Testing. 2020. T. **56**. № 1.
2. Shirobokov M., Kapustin V., Churkin A. In the book: Engineering and Ore Geophysics 2022. Collection of materials of the 18th scientific and practical conference and exhibition. Moscow, 2022. pp. **302-307**.
3. Sudakova M., Kalashnikov A., Vladov M., Terent'eva E., Marchenko A., Sadurtdinov M. Searching for structural voids in building structures by GPR. 2017. Geotechnics, № 2, M., OOO «Geomarketing», pp. **42-50**.
4. Kapustin V., Hmel'nickij A. Application of seismoacoustic and georadar observation complex at examination of hydraulic structures Geotechnics. 2014. № 1-2. pp. **74-84**.
5. Zerkal' E., Kalashnikov A., Lapshinov A., Tyutyunkov A. Detection of internal concreting defects in the body of a monolithic foundation slab using georadiolocation survey data // Bulletin of MGSU. 2020. T. 15. № 7. pp. **980-987**.
6. Zerkal', E., Kalashnikov, A., Lapshinov, A. (2023). Using Ground Penetrating Radars to Detect Cold Joints in Reinforced Concrete Structures. In: Ilki, A., Çavunt, D., Çavunt, Y.S. (eds) Building for the Future: Durable, Sustainable, Resilient. fib Symposium 2023. Lecture Notes in Civil Engineering, vol **349**. Springer, Cham. https://doi.org/10.1007/978-3-031-32519-9 48.
7. Kalashnikov, A., Lapshinov, A. OBSERVATION OF THE TECHNICAL CONDITION OF CROWN WOOD CONCRETE BARRIERS OF LARGE SECTION WITH GEORADAR // In Collection: Inspection of Buildings and Structures: Problems and Ways of Their Solution. materials of X scientific-practical conference. ed. by A. V. Ulybin. 2019. pp. **89-93**.
8. Lapshinov, A., Kalashnikov, A., Inspection of the technical condition of the foundation slab reinforced with glass composite reinforcement using GPR // In Collection: Inspection of Buildings and Structures: Problems and Ways of Their Solution. Materials of IX scientific-practical conference. 2018. pp. **133-139**.
9. Ivashov S., Razevig V., Capineri L., Bechtel T., Inagaki M., Gueorguiev N., Kizilay A. DESIGN AND APPLICATIONS OF MULTI-FREQUENCY HOLOGRAPHIC SUBSURFACE RADAR: REVIEW AND CASE HISTORIES // Remote Sensing. 2021. T. **13**. № 17.
10. Comparison of microwave diagnostics with other methods of non-destructive testing of composite products / A. Bugaev, S. Ivashov, V. Razevig, M. Chizh // Advances in modern radioelectronics. – 2020. – T. 74, № 4-5. – pp. **19-38**. – DOI 10.18127/j20700784-202004-02. – EDN WPUZVT.
11. Ulybin A., Fedotov S. Application of ultrasonic method for assessment of reinforced concrete damage zone after fire Engineering and Construction Journal. 2009. № 7 (9). pp. **38-40**.

12. De La Haza, A. Diagnostics of reinforced concrete tunnel walls with ultrasonic tomograph / A. De La Haza, A. Samokrutov, V. SHevaldykin // The world of measurement. – 2016. – № 1. – С. 18-22. – EDN VKZJPJ.
13. Kunin, Y. Vibroacoustic methods of quality control of building structures of buildings and constructions / Y. Kunin, A. Perunov // Industrial and civil construction. – 2023. – № 3. – С. 55-61. – DOI 10.33622/0869-7019.2023.03.55-61. – EDN XRKUCN.
14. Nigel J., Eddies R., Dods S. (2011). “A comparison between GPR and ultrasonic techniques for void detection beneath reinforced concrete sections.” Journal of Applied Geophysics, vol.74(4), pp 263–276. doi: 10.3997/2214-4609.20144415
15. Sambuelli, L.; Bohm, G.; Capizzi, P.; Cardarelli, E.; Cosentino, P. Comparison among GPR measurements and ultrasonictomographies with different inversion algorithms. An application to the basement of an ancient Egyptian sculpture. J. Geophys.Eng. 2011, 8, S106–S116. https://doi.org/10.1088/1742-2132/8/3/S10