Grain moisture control in the technological process of drying based on the dielcometric method

P.I. Kalandarov[1,*], *Kh.I.* Turkmenov[1], *A.A.* Abdukadyrov[2], *A.E.* Kutybaeva[2], and *S.* Marksuly[2]

[1]National Research University "Tashkent Institute of Irrigation and Agricultural Mechanization Engineers", Tashkent, Republic of Uzbekistan
[2]K.I. Satpayev Kazakh National Technical University, Almaty, Republic of Kazakhstan

Abstract. The paper discusses the problem of grain moisture control in the process of drying, analyzes the dielcometric method based on a high-frequency and ultra-high-frequency meter. Scientific directions of research are aimed at determining the basic requirements for methods of moisture control in non-equilibrium processes of heat and moisture exchange during drying of grain crops, and identifying the accuracy of dielcometric high-frequency and ultra-high-frequency methods of moisture control in the process of drying grain crops, and maintaining the necessary storage conditions in warehouses. Spectral analysis of signals requiring demodulation becomes increasingly complex as frequencies increase, with the greatest challenges occurring in the millimeter wave and at higher frequencies. These application notes discuss the development of a prototype and the design of instruments and describe methods for making accurate measurements with minimal costs in various operating conditions, and give metrological characteristics of a prototype moisture meter obtained during the testing period in laboratory and production conditions.

1 Introduction

Humidity and temperature of agricultural products, in particular, grain, is one of the important parameters that require constant monitoring, especially humidity control is in demand when it is dried and stored in warehouse conditions, where the ambient temperature directly affects the shelf life and quality of stored products, that there are no guaranteed universal optimal conditions, on which the technological procedures necessary to obtain products depend of the required quality. Grain moisture control during the drying process is within the following limits:

* Corresponding author: eest_uz@mail.ru

–With the established agrotechnical requirements, the unevenness of humidity without control of the drying process should be within ±1%, but in the process of drying in a chamber dryer, it reaches about 7-8%.

– By manually adjusting the drying process, it increases the drying capacity by up to 30%.

In order to maintain the correct microclimate in the warehouse, it is first necessary to determine the reference values of temperature and humidity for each type of grain, after that it is only necessary to maintain a system for monitoring and maintaining storage conditions in warehouses.

The process of controlling the parameters under consideration, transferring information and controlling is as follows: manual control of the process does not allow the operator to process the input information in a timely manner, therefore, for effective process control, grain moisture control must be automated. It is necessary to stipulate here that the temperature of heating the grain depends on its moisture content [1]. For this purpose, grain temperature control must be automated to control the supply of desiccant to the chambers.

2 Material and methods

To solve this problem, the National Research University "Tashkent Institute of Irrigation and Agricultural Mechanization Engineers" together with the Kazakh National Technical University named after K.I. Satpayev conducted research aimed at choosing a method and developing measuring devices for controlling the moisture content of grain (wheat) for a discrete and technological process in the production conditions of Galla-Alteg JSC, Tashkent.

At present, there is no uniform approach to the development of humidity control devices across the entire measurement range encountered in practice. This situation is explained by the fact that the characteristic features of various moisture measurement conditions have not been analyzed and systematized, both in the choice of measurement method and in the design of measuring instruments. A preliminary assessment of the technological requirements for the range and tolerances of humidity measurement and the temperature range of the measured object showed that the distribution of these parameters obeys the normal law. Changes in humidity with a probability of P(x) = 0.9 occur in the range of (0.2-30) %, and most of the technical requirements of manufacturers for measuring devices are satisfied when measuring humidity with an error of (0.5-1.5) %.

The materials in question are multicomponent, including grains and oilseeds.

3 Results of the study

When using the dielcometric method (high-frequency) of moisture measurement for grain and grain materials, where the electrophysical characteristics of the grain are specific conductivity (γ) and relative permittivity (ε).

The specific conductivity of γ and the permittivity of the ε are included in the well-known equations of field theory as proportionality coefficients [2]:

$$\bar{I} = \bar{\gamma}\bar{E} \cdot \bar{D} = \varepsilon\bar{E} \tag{1}$$

Where: and, are the vectors of electric field strength, electric induction, and electric current density, ε is the permittivity, respectively.$\bar{E}\bar{D}\bar{I}$

$$\delta = \gamma\bar{E} \tag{2}$$

Here: δ is the current density; γ is specific conductivity. Then for (2), and (3)

$$\bar{E} = grad\varphi, Q = \int_s^{\cdot} QdS = \mathrm{g}(\varphi_2 - \varphi_1) \tag{3}$$

where Q *is* the amount of electricity; S is the equipotential surface.

$$\bar{I} = \int_s^{\cdot} \delta_0 S = \mathrm{g}(\varphi_2 - \varphi_1), \tag{4}$$

where g is conductivity.

Using (3) and (4), we get:

$$\int_s^{\cdot} \varepsilon E dS = C(\varphi_2 - \varphi_1) u \int_s^{\cdot} \gamma E dS = \mathrm{g}(\varphi_2 - \varphi_1) \quad \text{or.} \ \frac{\varepsilon \int_s^{\cdot} \gamma E dS}{C} = \frac{\gamma \int_s^{\cdot} \gamma E dS}{C} \tag{5}$$

The complex permittivity of a nonpolar solid dielectric is determined by complex polarizability. Correspondingly, the frequency dependence of the dielectric constant will be determined by the frequency dependencies of the real and imaginary parts of electron and ionic polarization. From this it follows that the real and imaginary parts of thea_1 и a_i

$$\varepsilon^* = \varepsilon' - \gamma \varepsilon'' \tag{6}$$

are functions of the applied field and are defined by $\bar{a}_1(\omega)$ the $\bar{a}_i(\omega)$ dielectric loss tangent of the complex conductivity$tg = {\varepsilon'}/{\varepsilon''}\, \sigma^* = \sigma' + \gamma \sigma''$.

The change in the output signal y can be expressed by the following equation

$$dy = \frac{dy}{dW} dW + \frac{dy}{dz} dz + \frac{dy}{dp} dp + \frac{dy}{du} du. \tag{7}$$

The purpose of the information system is the best possible transmission of the useful signal $(\frac{dy}{dW})dW$ (with the maximum suppression of the interference described by the other components of the right-hand side of equation (7). Error minimization is achieved when the sensitivity of the measuring instrument to changes $S_w = \frac{dy}{dW}$in humidity is maximum, and the sensitivity to interference is minimized. To consider the effect of processing the results of direct measurement and when calculating errors, we will use the equation n $S_n = \frac{dy}{dz} + \frac{dy}{dp} + \frac{dy}{du}$ measurements$X_1, X_2, \dots, X_n$., *i.e.*

$$\vec{X} = (1/n)\Sigma x_i \tag{8}$$

In general, the error can be represented as

$$\delta = \sqrt{(\frac{df}{dx_1} \delta x_1)^2 + (\frac{df}{d_{x2}} \delta x_2)^2 + \cdots + (\frac{df}{dx_n} \delta x_n)^2} \tag{9}$$

In the case of indirect measurements, it is necessary to choose the correct accuracy of the measurement of the individual components on which the measured value depends

$$\delta_{general} = \sqrt{\sum \delta_i^2}. \tag{10}$$

The found relative errors (error due to the inaccuracy of measurements, sampling, graduation, weighing, inhomogeneity, temperature, electrolyte concentration, as well as instrumental errors) affect the metrological characteristics of the designed measuring instruments. The above-mentioned features of materials should be taken into account when mathematically describing the dielectric properties of the materials under study as a function of humidity.

Ultra-high-frequency (microwave) methods of very high frequency can be distinguished into a special group, the comparative analysis of which was carried out by the authors of the review [2, 3, 4 - 6]. Microwave methods refer to the so-called non-contact methods. The method of dielcometric and devices based on this principle consist in measuring the dielectric

constant of the material that fills an electric capacitor, the capacitance of which is determined by the following equation.

$$C = k \cdot \varepsilon. \tag{11}$$

where k is the coefficient determined by the size and structure of the capacitor. ε - dielectric constant of the material. Substances and materials can be divided into conductors, semiconductors, and dielectrics according to their electrical properties.

The most important parameter of the traveling harmonic is the wave number, which describes the dependence of the electromagnetic field strength $k_z E$ and H on the vertical z-coordinate of the transmission line:

$$E = (x, y, z, t) = E(x, y)e^{ik_z z - i\omega t}, \tag{12}$$

$$H(x, y, z, t) = E(x, y)e^{ik_z z - i\omega t}, \tag{13}$$

Where: k_z is the complex function of the frequency ω, then, $k_z(\omega) = kz' + ik_z''$ where k_z', $k_z''$are the real functions of the frequency. Here k_z' we take the phase reflection coefficient as the phase reflection coefficient, and k_z'' the value as the attenuation coefficient.

If there is no energy absorption, i.e. the permeability and the permittivity of the filling medium are real numbers, then the imaginary part of the wave number $k_z'' = 0$, and the frequency of the wave will be equal to and $k_z'' > 0\omega < \omega_{cr}$ when $\omega > \omega_{cr}$.

In practice k_z, the γ propagation coefficient determined by the equation $\gamma = ik_z$. The phase velocity of the harmonics is expressed as the real part of the wave number and the following relation $v = {}^{\omega}/_{k_z'}$

In conductors, an electric charge is transferred by an electric field. In microwaves, it is not the reflection and transmission coefficients that are most often directly measured, but the values associated with them: the standing wave voltage coefficient, $K_{ct}U$, and attenuation.

In the presence of inhomogeneities in the microwave line, incident and reflected waves create standing waves:

$$U = U_{fal}e^{-j\beta_0 z} + U_{ref}e^{j\beta_o z}. \tag{14}$$

In this case, the equation for the module is described:
$|U_{max}|$ -maximum and – minimum value $|U_{min}||U|$

$$|U_{max}| = U_{fal} + U_{ref}, \quad |U_{min}| = U_{fal} - U_{ref}. \tag{15}$$

Then $K_{ct}U$ it will look like this:

$$K_{ct}U = \frac{|U_{max}|}{|U_{min}|} = \frac{U_{fal}+U_{ref}}{U_{fal}-U_{ref}} = \frac{1+\frac{U_{ref}}{U_{fal}}}{1-\frac{U_{ref}}{U_{fal}}} = \frac{1+|R|}{1-|R|}. \tag{16}$$

By measuring the standing wave coefficient by voltage and attenuation $K_{ct}U$, we can determine R. R is the modulus of the reflection coefficient of the air-material interface.

$$R = (1 - \sqrt{\varepsilon' - j\varepsilon''})^2 / 1 + \sqrt{\varepsilon' - j\varepsilon''})^2; \tag{17}$$

At full reflection from a given sample surface, attenuation

$$A = 8{,}65(\tfrac{2\pi}{\lambda})\sqrt{\varepsilon'}D\mathrm{tg}\delta. \tag{18}$$

In measuring $K_{ct}U$ the measuring line is used as a measuring instrument.

The measured parameter is the attenuation A(dB), which in the case of sufficiently large layer thicknesses, when the reflection from the back wall can be neglected, is related to the

humidity by an approximate ratio [1]. Polarization, the process of formation of bulk dipole electric moments in a medium, the mechanism of dielectric polarization depends on the nature of chemical bonds.

We will analyze information and measurement systems, including the main information parameter (W) and other non-informative parameters that affect the moisture content readings of the material under study. The physical properties and components of these materials vary significantly and depend on a number of factors, including their moisture content (W), temperature (T), and other non-informative parameters.

$$F = f(W, T, S, Z, X, \dots, N) \tag{19}$$

This article attempts a new approach to solving this problem. Analysis of the literature [4-8] shows that there is no single approach to the choice of operating frequency and control method. For example, developers recommend operating frequencies from 75 kHz to 2 MHz and sensor capacitances from 7 to 10 pF [7]; Bridges with Z-meters, F-meters, non-contact inductive coupling, and parameter modulation are used.

Analysis of the results of the use of moisture meters and equipment used to control the moisture content of grain and grain raw materials shows that preference should be given to F-meters with a sufficiently high and constant sensitivity at the Q-length of the circuit.$Q > 1$

When selecting the operating frequency and capacitance of primary transducers, many designers overlook the need to consider the parameters and characteristics of the operating oscillating circuit. With an increase in frequency, the polarization mechanism of relatively low-frequency types gradually becomes less smooth and is accompanied by a decrease in the dielectric constant. The frequency-humidity properties of the material under consideration show that there is a dependence between the dielectric constant and humidity, the nature of which depends on the frequency: with an increase in frequency, the sensitivity to humidity decreases [8].

For moisture measurement, the medium- and short-wave ranges (from 0.1 to 30 MHz) of high frequencies are most often used. In this range, primary capacitive transducers of dielcometric control devices can be considered as systems with lumped parameters [9].

4 Discussion

The main goal and object of our research is the technological process of grain drying, and the subject of research is the control of grain moisture.

The basis of the drying theory is the regularity of heat and moisture transfer during the interaction of wet materials with heated gases and hot surfaces, as well as in the processes of thermal and electromagnetic irradiation in the presence of phase transformations.

Let's take a look at the mass balance when drying. Common to convective, contact and other drying methods is the mass balance of the material to be dried. To make a balance, it is expressed as follows:

G_1 is the mass of the wet material to be dried, kg/h; G_2 is the mass of the dried material, kg/h; W_1 and W_2 are the initial and final moisture content of the material, respectively (counting the total mass of the material), %; W is the mass of moisture removed from the material during drying, kg/h. The material balance is as follows.

$$G_1 = G_2 + W. \tag{20}$$

by the absolutely dry matter in the material to be dried

$$G_1 \frac{100 - W_1}{100} = G_2 \frac{100 - W_2}{100} \tag{21}$$

Equation (20) follows:

$$G_1 = G_2 \frac{100-w_2}{100-w_1} \tag{22}$$

and

$$G_2 = G_1 \frac{100-w_1}{100-w_2}. \tag{23}$$

Typically, the purpose of material balance is to determine the mass of moisture W removed during drying. From equation (20) we find

$$W = G_1 - G_2 \tag{24}$$

$$W = G_1 - G_1 \frac{100-w_1}{100-w_2} = G_1 \frac{w_1-w_2}{100-w_2}. \tag{25}$$

When setting the expression (22) of the G1 value according to equation (25), we determine the mass of the moisture to be removed:

$$W = G_2 \frac{w_1-w_2}{100-w_1}. \tag{26}$$

From the balance equation, we determine the flow rate of absolutely dry air for drying

$$L = \frac{W}{x_2-x_0}. \tag{27}$$

Let us denote the moisture content of the air heated in the heater and entering the dryer through *x*, kg/kg of dry air. Passing through the heater, the air does not absorb or release moisture, so its moisture content remains constant, i.e.

$$x_1 = x_0. \tag{28}$$

The main scientific directions of our research are as follows:

1. To determine the basic requirements for moisture control methods in non-equilibrium processes of heat and moisture exchange during the drying of grain crops.
2. To identify methodological errors of dielcometric high-frequency methods of moisture control in the process of drying grain crops.

To achieve these goals, the research was aimed at improving high-frequency methods using dielcometric moisture meters. Moisture measurement is carried out indirectly by measuring the relative permeability of the medium being measured, which is highly dependent on the moisture content. A prototype of the device using a primary measuring transducer (PMT) of this type had a high measurement speed and a fairly high measurement accuracy. Such results were obtained due to the good contact of the measuring probe with the measured object and, at the same time, a wide range of measurements of the moisture content.

According to the results of our research, this type of experimental moisture measurement device using capacitive PMT is the most common in grain drying control systems, with a measurement error of up to 0.1%. The use of humidity control devices in drying plants makes it possible to automate the process of drying grain products and save energy.

However, since the measured values depend on the grain variety and growing conditions, correct calibration is necessary. In addition, the measured values of the moisture control devices also depend on the temperature of the grain being measured, so temperature compensation of the measured values is necessary.

Analysis of the literature in the field of moisture content measurement in grain and grain products [10-15] that for operation in ACS grain dryers, among the possible in-line moisture control devices, the dielcometric meter based on the high-frequency method and the microwave (ultra-high-frequency) humidity control device used by us confirmed the optimality and can be used for the materials under consideration.

Figure 1-4 shows graphs of humidity as a function of various factors, as well as block diagrams of a high-frequency and ultra-high-frequency measuring instrument.

The moisture meter (Fig. 1) is built on the block-modular principle. The sample cuvette (K) is rotated around the vertical axis by a stepper motor (M), which is controlled by a control unit (CU). Signals from M1 and M2 (microwave modules) and temperature and pressure sensors (TS, PS) are transmitted to the basic measuring circuit (BMC), where signals of attenuation, phase shift of the microwave wave, temperature and pressure of the sample are generated into standard signals for interface with a microcontroller (MC), from which the signal corresponding to the measured value is fed to the analog-to-digital converter (ADC). The microprocessor (MP) performs all the computational operations. After the polynomial is calculated, the moisture content of the material is determined and digitally displayed on the indicator (I) and fed to the control object (CO).

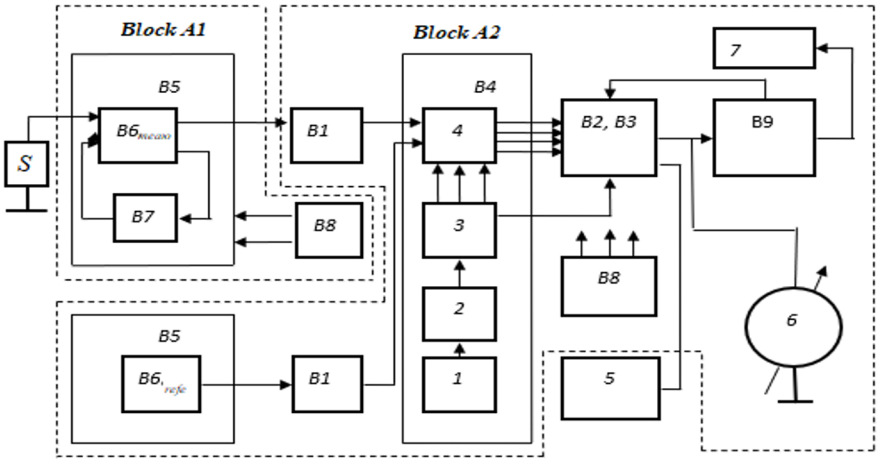

Fig. 1. Block diagram of a high-part moisture meter.

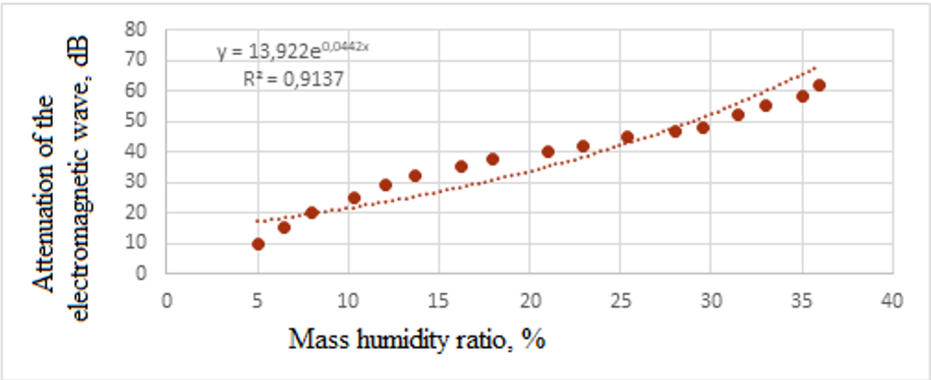

Fig.2. Graph of the dependence of the attenuation of the electromagnetic wave on the mass ratio of grain moisture.

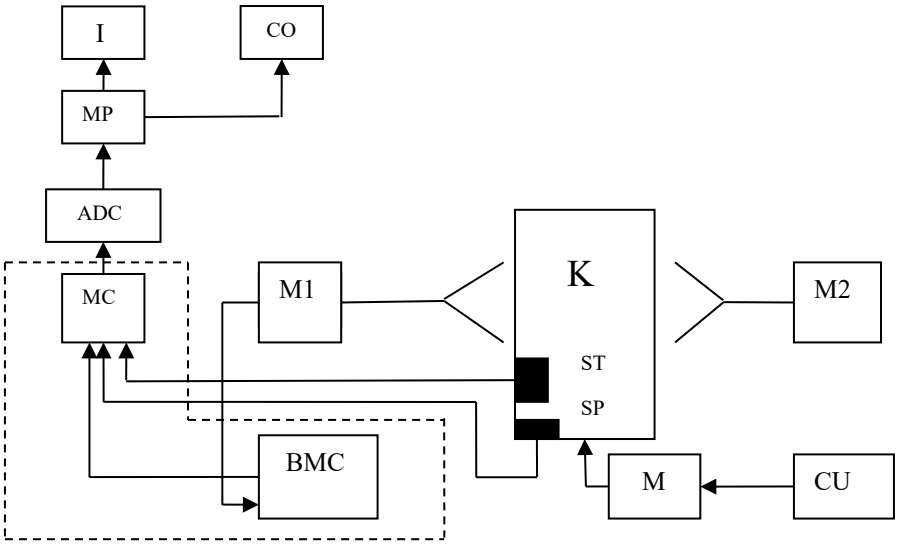

Fig.3. Structural diagram of a microwave moisture meter.

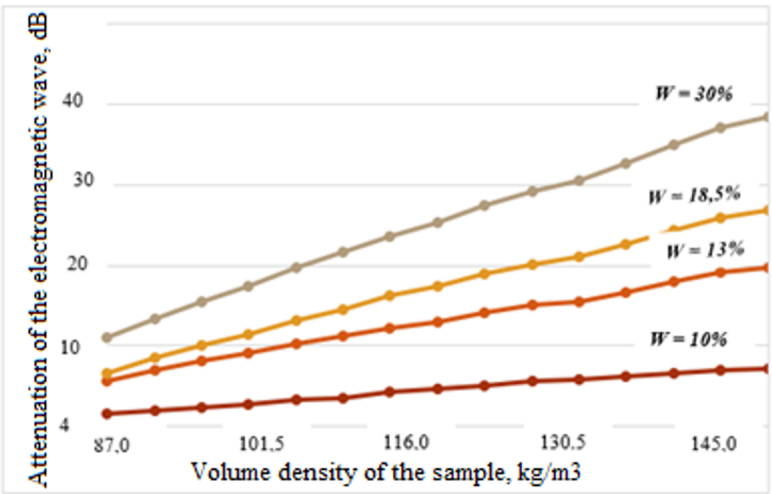

Fig.4. Graph of the dependence of the attenuation of the electromagnetic wave on the bulk density of the grain.

The technical implementation of the means for measuring the moisture content of grain in the stream requires the development of direct measurement methods implemented by automatic devices (moisture meters) [16].

Such methods are based on the physics of grain properties in high-frequency (HF) electromagnetic fields (frequency range 5.103-5.107 Hz). Dielectric constant and dielectric losses in RF magnetic fields (dielcometric or capacitive RF moisture meters). The humidity measurement range of this instrument during the test period ranged from 0.1 to 100%, while the measurement error did not exceed 1.5%, in the humidity measurement sub-range from 10 to 20% [17-18].

During the drying process, temperature control systems are exposed to various, often uncontrollable disturbances with unknown statistical characteristics. Therefore, it is important to provide reliable characteristics that ensure that the control quality criterion is

close to the optimal value even under conditions of statistical uncertainty, i.e. in the absence of information about the statistical characteristics of the perturbations.

Proportional-integral laws of control are often used in the grain processing industry. Thus, temperature is the main parameter influencing the quality of the dried product during the drying process. When managing the temperature in the dryer, it is important to optimize the thermostat.

The development and study of automation of the drying process allows you to obtain a high quality of the finished product and optimize the process of its production.

4 Conclusion

The most reliable method for real-time moisture measurement of most materials is the dielcometric method, which has a high sensitivity to changes in the moisture content of materials in the range from 1 to 40% and a fairly high measurement accuracy. Therefore, it is desirable to develop a system of automatic humidity control of objects based on the dielcometric method.

Having analyzed the physical and chemical processes in which moisture interacts with the material under study, the existing technological processes of drying and methods of humidity control, it was concluded that the dielcometric method of control, which can be implemented in various versions of equipment with digital information processing, has the greatest functionality.

Approbation and results of this device made it possible to implement it as a prototype, on the basis of which a device based on the RF or microwave method can be developed in the future.

In our case, the prototypes for grain moisture control in technological processes, when designing similar equipment for moisture control during the drying of grain and its by-products, it is recommended to take into account the following characteristics:

1. Humidity measurement range. Since the moisture content of freshly harvested grain usually does not exceed 35%, and for long-term storage, its moisture content is reduced to 10... 18.5%, the maximum measurement range of 10... 35% will be sufficien;
2. Measurement error. The smaller it is, the better, but in most cases, an error of 0.5 to 1% is acceptable for in-line moisture meters; Operating temperature range±5 to +50 °C. Operating mode: continuous operation. Measurement interval 0.2-05 s.
3. No dependence of the readings on the grain grade or, if there is a dependence of the readings, the possibility of quick recalibration of the device for a specific grade of the tested material (grain);
4. Measurement speed. The permissible frequency of updating the readings depends on the location of the PMT installation, the speed of grain movement and the thermal inertia of the grain dryer;
5. Design, installation method and permissible temperature range of the humidity control device probe operation. This is especially important, for example, when installing the device probe directly inside the grain dryer shaft in the area of high operating temperatures;

Types of output interfaces and parameters transmitted to the automated control system of the grain dryer equipped with standard interfaces (RS-232, RS-485, 4...20 mA, MODBUS RTU) must be connected to the automated control systems. Protection class - IP65 / EX ia.

The developed prototype of the discrete and in-flow grain moisture meter can be used to measure the moisture

content in the wet mass of cereals and various agricultural products.

References

1. V.A. Zaltsman, Drying and cooling of grain mass: technological features and ualitative parameters of «Niva Rossii», **1 (167)** (2019).
2. E.S. Krichevsky, A.G. Volchenko, S.S. Galushkin, *Inspection of wet, solid and bulk materials* (Moscow, Mashinostroenie Publ., 1986) 136. (In Russian).
3. A.S. Sovlukov, Sensors and systems, **5**, 63–69 (2003).
4. Yu.P. Sekanov, M.A. Stepanov, VNIIMZH, **4 (24),** 110-115 (2016).
5. P.A. Fedyunin, D.A. Dmitriev, A.A. Vorobyov, V.N. Chernyshov, *M59 Microwave thermal moisturemetry*, (Moscow, Mashinostroenie Publishing House, 2004) 208. (In Russian).
6. D. Camuffo, *Measuring Time of Wetness and Moisture in Materials*. In Microclimate for Cultural Heritage (Elsevier: Amsterdam, The Netherlands, 2019) 459–482.
7. P.I. Kalandarov, Measurement Techniques, **65(4)**, 297–303 (2022). https://doi.org/10.1007/s11018-022-02082-9
8. P.I. Kalandarov, G.I. Ikramov, Measurement Techniques, **66(4),** 237–243 (2023)
9. A. Aichholzer, C. Schuberth, H. Mayer, H. Arthaber, Eur. J. Wood Prod., **76**, 89–103 (2018).
10. T.S. Shteinberg, T.A. Leonova, System of measuring the moisture content of grain and grain products, **9**, 8–10 (2009).
11. G.P. Eroshenko, N.K. Sharuev, V.N. Sharuev, D.P. Evstaf'ev, Measurement Techniques, **61**, 1035–1040 (2019). https: doi.org10.1007s11018-019-01544-x
12. A.K. Khurtsilava, T.D. Dzhaparidze, Experimental studies of equivalent active resistance of the capacitive moisture sensor of grain, **5**, 45–47 (2006).
13. P.I. Kalandarov, K.K. Abdullayev, IOP Conference Series: Earth and Environmental Science, **1043(1),** 012011 (2022) doi:10.1088/1755-1315/1043/1/012011
14. A. Parsokhonov, P. Kalandarov, O. Olimov, A. Akhmedov, IOP Conference Series: Earth and Environmental, **1076(1),** 012010 (2022) doi:10.1088/1755-1315/1076/1/012010
15. P.I. Kalandarov, D.A. Abdullaeva, IOP Conference Series: Earth and Environmental Science, **1043(1),** 012012 (2022)
16. O. Logunova, P. Kalandarov, E. Garbar, M. Abdullaev, N. Alimova, O. Matchanov, K. Abdullaev, E3S Web of Conferences, **304,** 02013 (2021) https://doi.org/10.1051/e3sconf/202130402013
17. P.I. Kalandarov, N. Avezov, O. Olimov, B. Narimanov, AIP Conference Proceed, **2812(1)**, 020014 (2023) https://doi.org/10.1063/5.0161764
18. P. Kalandarov, O. Olimov, IOP Conference Series: Earth and Environmental Science, **1142(1),** 012005 (2023)