Justification of technological indicators of machines for the production of bulb onion in an annual crop

Ivan Irkov*

All Russian Research institute of Vegetable Growing - branch of Federal State Budgetary Institution "Federal Scientific Vegetable Center", 140153, Ramensky district, 500, Moscow region, Vereya village, Russia

Abstract. Onion is one of the main vegetable crops. Its consumption in Russia reaches 2.0 million tons. The gross harvest amounted to 1601.5 thousand tons in 2022 with a yield of 31.3 t/ha. The purpose of the research is to substantiate the technological performance of machines for the mechanized cultivation of onions in an annual crop, providing a yield of 70 - 80 t/ha, on alluvial meadow soils of the Non-Chernozem Zone of Russia. The research method is field experience. Issues considered: application of fertilizers, spring tillage, weed control in the previous field and during the growing season, pre-sowing treatment and sowing of seeds in the field, pest and disease control through foliar spraying, drip irrigation, harvesting work

1 Introduction

In Russia, in recent years there has been a slight fluctuation in the size of areas occupied by vegetable crops (478.6 thousand hectares in 2021 and 482.0 thousand hectares in 2022) [1]. The average vegetable yield is growing and amounted to 25.2 t/ha in 2022. Industrial production of vegetables in agricultural organizations and peasant farms occupied 191.2 thousand hectares in 2022 (39.7% of the total vegetable area). These farms produced more than 70.0% of the total gross vegetable harvest, which amounted to 13.6 million tons in 2022.

Onion is one of the main vegetable crops. It is also the most profitable crop. While an average production cost amounted to 10.0 rubles/kg, wholesale prices in the Moscow region in the winter season of 2022–2023 reached 45 rubles/kg. However, in Russia, the crop area continues to decline: 60.6 thousand hectares in 2020 and 52.2 thousand hectares in 2022. The gross harvest in 2022 amounted to 1,601.5 thousand tons with a yield of 31.3 t/ha. It should be noted that the total consumption of onions in Russia, taking imports into account, reaches 2000.0 thousand tons.

A sharp decrease in the crop area occurred in the Moscow region. According to the agricultural census of 2016 [1], onions occupied 1312.1 hectares (agricultural organizations - 235.3 hectares; households - 1076.8 hectares). In 2022, these areas were respectively: 0.0

* Corresponding author: irkov@yandex.ru

(zero) and 900.0 hectares. This situation can only be explained by the unprofitability of onion production.

The reason is that onions remain a risky farming crop. Problems of crop rotation and environmental conditions [2 - 9], fertilizers and plant nutrition [10 - 11], weed control [15 - 17], pests [18 - 19], diseases [20], maintaining optimal moisture [21 - 22], harvesting [23], post-harvest storage [24 - 26] often remain unsolved. Each of the identified problems can reduce the results of the efforts expended to zero.

The simultaneous and consistent development of the entire complex of technological problems seems to us to be the main direction for improving onion production technology.

The production of onions, especially in the Central, Northwestern, and other regions of similar latitude with sum of active (more than 10 ºC) average daily temperatures of 2000-2200 ºC during the growing season, has its own special specifics:

- Abundant cold night dew in late July - early August creates favorable conditions for the spread of fungal diseases, especially downy mildew.
- The emergence of new varieties and hybrids, as well as plant protection products, has made it possible to obtain guaranteed yields.
- The growing season of annual intensive varieties and hybrids is 100 – 110 days in the conditions of the Non-Chernozem Zone.

Increasing the production of onions in Russia is possible only by further increasing productivity while reducing the cost of its production. Further improvement of technology is necessary in this direction.

The purpose of the research is to substantiate the technological performance of machines for the mechanized cultivation of onions in an annual crop, providing a yield of 70 - 80 t/ha, on alluvial meadow soils of the Non-Chernozem Zone.

The production of onions in a one-year crop in terms of labor intensity (~ 600.0 man-hours/ha) is much more profitable than a two-year crop (~ 1500.0 man hours/ha). However, an annual crop has significant specifics of technology [5] and machines and requires higher qualifications of performers.

The process of producing onions and turnips includes technological operations given in table 1.

Table 1. Technological operations and machines required in the onion production process.

No.	Name of technological operation	Name of machines and equipment
1	Autumn treatment of perennial weed seedlings with glyphosate-based herbicides	Boom sprayer
2	Autumn plowing without skimmers	Mounted plow
3	Spring application of the calculated dose of mineral fertilizers	Mineral fertilizer spreader
4	Spring milling of plowed land with the incorporation of mineral fertilizers	Vertical milling cultivator
5	Sowing seeds using precision seeding	Precision seeder
6	Application of herbicides during the season	Boom sprayer
7	Application of fungicides – up to 6 treatments; insecticides – 2 treatments per season	Boom sprayer
8	Installation of drip irrigation	Water supply line with filter system
9	Watering and root feeding with soluble mineral fertilizers (~40–60 kg/ha in active ingredient according to the calculated yield) together with biological products – 3 feedings	Drip irrigation
10	Laying down the onion leaves	Scraper
11	Desiccation of onion leaves	Boom sprayer

12	Removing dry leaves	Belt whip
13	Digging up onions and laying them in a windrow	Onion digger–stacker
14	Selecting onions from the windrows and transporting them to storage	Pick-up loader

In the period 2010 - 2023, we studied the parameters of these operations and optimized them.

2 Materials and methods

All experiments were carried out in 2010-2023 on the experimental field of VNIIO in vegetable crop rotation according to [6] on an area of 1000 m^2. The soil of the site is alluvial meadow, medium loamy. The humus content in the 0-20 cm layer is 3.0 - 3.2%. The pH of the salt extract is 6.0-6.2. The content of the sum of absorbed bases is 45.0 mEq. per 100 grams of soil in a layer of 0-20 cm. Content of P_2O_5 in a layer of 0-20 cm 22.0 mg per 100 grams of soil (according to Chirikov), potassium -15.2 mg (according to Maslova), total nitrogen – 6.0 mg.

Complex fertilizer $N_{160}P_{160}K_{160}$ was added to the experiments. Sowing was carried out in the early stages using a Gaspardo seeder Olimpia. The estimated plant density is 650.0-700.0 thousand plants per hectare. The varieties used in the experiments were: Siberian One-year-old (ZSOOS), Forward (VNIIO - SSK "Poisk") and hybrids: F_1 Vasily (TSKHA), F_1 Premito (Monsanto).

All experiments were carried out in quadruplicate. The size of the experimental plots was 12 m^2. The location of the plots is systematic.

The design and modification of the working parts of machines for removing onion leaves and digging up onions with windrowing was carried out in the technology and innovation department of VNIIO and OJSC Ryazselmash.

The machines were tested according to special programs, as well as in accordance with industry standards.

3 Results and discussions

Onions are grown, as a rule, in vegetable crop rotation [2 - 9] on highly fertile irrigated lands with a humus content of more than 3%.

We have studied the predecessors: beets, carrots, Margelan radish, mustard – for green manure. The highest yield (70.0 - 80.0 t/ha) at the same level of application of mineral fertilizers ($N_{120}P_{120}K_{120}$) was provided by the mustard predecessor – for green manure. It should be noted that the technology requires the use of a mulcher-shredder to ensure high-quality incorporation of green manure by subsequent fall plowing.

In the vegetable crop rotation, there is intensive reproduction of perennial, wintering and herbicide-resistant weeds (thistle of all types, field bindweed, common groundsel, black nightshade, acorn grass, etc.). Reducing their prevalence is possible only through autumn treatments with a non-selective herbicide based on Glyphosate during the active growth phase (before the formation of a peduncle).

The efficient use of fertilizers [10 - 11] is an important indicator of the quality of technology. For an onion yield of 70.0 t/ha, the average removal of nutrients per hectare is $N_{196}P_{105}K_{280}$. Due to the high mobility of nitrogen, in order to avoid losses, the bulk of fertilizers (~ 60.0% of the calculated amount) should be applied in the spring, followed by their immediate incorporation into the soil.

We assessed the effectiveness of applying fertilizers by spring plowing (depth 18 - 20 cm), milling with vertical and horizontal cutters (depth 8 - 18 cm), continuous cultivation with pointed teeth (depth 5 - 8 cm).

Each of these operations has its own undesirable effects:

Spring plowing is accompanied by increased soil drying and an increase in crop infestation with weeds (up to 30.0%).

Milling with a horizontal milling machine creates a fluffier soil layer compared to vertical milling and, in this regard, delays seedlings by 2–3 days compared to vertical milling.

Continuous tillage with pointed teeth incorporates fertilizers too finely and the resulting onion seedlings remain in a depressed state for a long time due to the increased concentration of ions in the soil solution.

Due to the above, the use of a vertical cutter in plowed soil in the spring to a maximum depth (more than 20.0 cm) is optimal for seedlings and plant development.

In order to avoid seed rotting during early sowing of crops during periods with long cold spells (10 - 14 days), it makes sense to pre-sow them. We have obtained positive results when treated with one of the following fungicides:

Maxim, KS (active ingredient Fludioxonil 480 g/l) - 1.5 l/t of seeds with a working fluid flow rate of 15 l/t;

TMTD, VSK (active ingredient Tiram 400 g/l) – 3 – 4 l/t of seeds with a working fluid flow rate of 10 l/t;

BisolbiSan, J (*Bacillus subtilis, strain Ch-13)* – 2 ml/kg with a working fluid flow rate of 1 – 1.5 l/kg. Soak for 2 hours.

After treatment with a fungicide, the seeds should be dried in an air stream bringing it to a loose state at 30 - 35 ^{0}C.

The next technological operation is the precision sowing of seeds. It ensures uniform distribution of seeds across the field, which, in turn, determines the standard and uniformity of production.

The most important characteristics are the depth and sowing pattern. Due to the need for high soil moisture (80% full moisture capacity) to ensure the required field germination of seeds (more than 90%), we are interested in the maximum permissible sowing depth. The results of experiments on sowing depth are given in Table 2.

Table 2. Results of experiments in 2012 - 2014 on changes in field germination of onions F_1 Bennito depending on sowing depth. (Laboratory germination 95%)

Planting depth, cm	2.0	2.5	3.0	3.5	4.0	5.0	
Field germination, %	75.0	73.0	64.0	49.0	51.0	55.0	LSD_{05} 5.0

The results of the experiments show that there is a sharp decrease in field germination when seeds are planted to a depth of more than 3 centimeters. Optimally, we recommend planting 2.5 – 3.0 cm deep. During operation, depth fluctuations are ± 0.5 cm.

A study of sowing schemes showed that single-line sowing of onions is significantly (up to 30%) inferior to two-line sowing in terms of yield and standard of production (Table 3).

Table 3. Single-line and two-line onion sowing schemes and its standard, (2012-13)

Name of samples	Sowing scheme	Estimated number of plants, thousand pcs/ha		
		general	Including	
			standard	Share of the
F_1 Bennito	Single line	598.8	428.7	71.6
	Double line (6 cm)	605.7	548.5	90.6

F_1 Universal	Single line	697.1	474.3	68.0
	Double line (6 cm)	688.5	488.1	70.9
			LSD_{05} =11.0	

At the same time, comparative tests of two-line sowings (Table 4) show that with line widths of 6 and 9 centimeters we have almost the same yield and standard per linear meter of line. This is explained by the fact that with a denser arrangement, plants have a mutually inhibitory effect as they fight for living space.

Table 4. Yield indicators per linear meter of tape 6.0 and 9.0 centimeters wide on Bennito F_1 onions (2013-2014 data)

Options	Onion yield, kg/linear m		
	general	including	
		standard	non-standard
Tape 6 + 20 cm	5.405	4,930	0.475
Tape 9 + 17 cm	5.25	5.025	0.225
		LSD_{05} =0.45	

Based on the research results, it can be concluded that sowing seeds should be carried out with a precision seeder using tapes with two-line sowing in a tape. The width between lines must be greater or equal to 6 centimeters. We recommend a three-band scheme 32+7+28+7+28+7+32 cm, since the field is better blown by the wind, which is least favorable for fungal diseases.

The actual plant density should be 600-700 thousand plants/ha. In this case, mutual inhibition of plants is not observed. A further increase in density entails an increase in the non-standard proportion of the yield. E.g., with a density of 800.0 thousand plants/ha, the share of non-standard, depending on weather conditions, reaches 20.0%.

Pneumatic precision seeders Gaspardo, Agricola, SONP have operating speed restrictions - 4.5-5.0 km/h, Monosem - 6.2-7.0 km/h, since at higher speeds the cells of the seeding discs are not filled completely and there are gaps.

The weak point of the seeders used is the seed agitators in the hopper, which do not cope well enough with the formation of seeds, especially during long-term operation.

To avoid the formation of a soil crust due to precipitation, we do not recommend post-sowing compaction of the field with smooth rollers.

The emergence of seedlings after sowing, as a rule, occurs after 17 - 20 days.

One of the most important technological operations is **weed control** [15 – 17] during the growing season. The following herbicides are registered for onion treatments:

Stomp Professional MKS (active ingredient Pendimethalin 455 g/l) and its analogues - application after sowing and on onion seedlings.

Goal 2E, EC (active ingredient Oxyfluorfen 240 g/l) – use in the phase of up to 3 leaves of onion.

Reglon Forte, VR (active ingredient Diquat 150 g/l) – spraying 2 – 3 days before onion shoots

We obtained good results against the background of pre-emergence application of Reglon Forte 2.0 l/ha and post-emergence treatments of Goal 2E at a rate of 0.25 l/ha in the phase of the first (length 3 - 4 cm) and third true leaf of onions against weeds in the early stage of

development (cotyledons). The reduction in the number of weeds compared to the control was 72.0%, and their mass – 86.0%.

The list of insect **pests of onions** [18 - 19] is significant and exceeds one dozen. The most harmful in the conditions of the Moscow region are onion fly, potato moth, and onion moth.

The hatching and flight of adults and the number of generations of pests are largely determined by weather conditions and occur from the end of April almost throughout the entire growing season. The main task of the vegetable grower is to maintain crop rotation, destroy plant residues, spatial isolation of crops, and high-quality fall plowing.

One should carefully monitor the appearance of pests in flight and the beginning of egg laying. Do not delay treatment with two-component systemic insecticides, for example: Eforia, KS (active ingredient Lambdacyhalothrin + Thiamethoxam) – 0.2 – 0.3 l/ha; Borey, SK 0.2 - 0.25 l/ha Avant, KE 0.2 - 0.3 l/ha and others.

The fight against downy mildew and other fungal diseases [20] should be carried out mainly by chemical methods and is preventive in nature. There are no resistant varieties and hybrids, although breeders are working to create them.

Treatments should begin on the 20th of June during the period of the appearance of peronospora on perennial onions. We recommend that the optimal frequency is 7-10 days (7-14 days according to the manufacturer's recommendations). The most effective are two-component preparations: Ridomil Gold MC, VDG (active ingredient Mancozeb + Mefenoxam 640 + 40 g/kg) – 2.5 kg/ha, 3 treatments; Revus Top, SC (active ingredient Mandipropamide + Difenoconazole 250 + 250 g/l) – 0.6 l/ha, 2 treatments, as well as all Mancozeb-containing preparations.

Treatment of crops with herbicides, insecticides and fungicides is carried out using **boom sprayers.** Slot and injection nozzles provide a range of droplet size changes from 50 to 750 microns, disk and rotary nozzles – 100 – 450 microns.

The size of the droplets remaining on the plant is in the range of 150 - 400 microns. Droplets smaller than 200 microns often evaporate or are carried away by the wind, while droplets larger than 400 microns roll off the plant.

When the relative air humidity is less than 60% and the temperature is more than 25 ^{0}C, intense evaporation of droplets occurs in flight. Thus, droplets less than 100 microns virtually do not reach the surface being treated.

The most applicable at present are slot (as the simplest and most reliable) and injection (drops filled with air bubbles and provide good coverage of plants) nozzles.

Disc and rotary sprayers have a more even composition of droplets (up to 80% - 150 - 400 microns), which fall on the plants under their own weight and are largely carried away by the wind.

The optimal conditions for the operation of sprayers are: Air temperature – 15 - 25 ^{0}C; Relative air humidity – more than 65%; Wind speed: up to 3 – 4 m/s – for slotted ones, up to 5 m/s – for injection ones; Operating speed – up to 5 - 6 km/h – for slot-type ones, up to 8 – 10 km/h – for injection ones.

It should be noted that, taking into account droplets carried away by the air and flowing from plants, less than half of expensive pesticides are actually used for their intended purpose, and working in conditions other than optimal increases their losses several times over.

The task of improving the technological process for applying pesticides and the design of the sprayers used has long required a radical solution.

The most important technological operation is **maintaining the required level of** soil moisture (80% NV) during the growing season [21 - 22]. Excess moisture leads to leaching of nutrients from the soil, and its lack leads to slowing down or stopping the growth of onion plants, followed by yellowing and dying of the tips of the leaves and then a significant reduction in yield.

We took into account the quantity and uniformity of water supply for **drip irrigation** along the width and length of an irrigated area of 0.1 hectares with drippers located every 0.3 meters and a productivity of 1.6 l/hour. Inlet water pressure is 2.0 kg/cm^2. The productivity of the droppers was 1.2 l/hour. The deviation from the average flow rate of each dropper did not exceed 10%. Saving irrigation water is 60.0% with a yield of 70.0 - 80.0 t/ha.

With a cost of drip irrigation of 120.0 thousand rubles/ha (in 2015 prices) and a selling price of onions of 14.0 rubles/kg, the payback of the drip irrigation project will occur with an increase in yield by 9.0 t/ha. Usually, this increase is greater.

Harvesting technology [23] accounts for up to 75% of all labor costs in onion production technology and is available in two versions:

1. Digging the onion into a windrow followed by drying it in the sun → Selecting and transporting the onion to storage → Peeling or trimming the onion leaves → Drying at 35 ^{0}C and relative humidity less than 65.0% → Storage.

2. Laying down onion leaves in the field → Spraying with desiccant → Removing dry feathers with a belt whip → Digging up onions and placing them in a windrow → Selecting and transporting onions to storage → Drying onions at 35 ^{0}C and relative air humidity less than 65% → Storage.

The least labor-intensive is the second option, which we took as a basis.

The laying down of onion leaves is carried out in the second half of August and is carried out with a rubberized cloth attached to a tractor.

Desiccation of the feathers follows immediately after laying by foliar spraying with Reglon Forte, VR (active ingredient Diquat 200 g/l. Registered on edible flat potatoes) at a rate of 2.0 l/ha with a working fluid flow rate of 200 - 300 l/ha. It is possible to use Diquat-containing analogues.

Analysis of the 2018-2020 harvest showed that no residual amount of Diquat was detected in the bulbs.

To remove dried leaves, we have developed **a belt whipper** (Figure 1), consisting of a frame, two rotors with radial belts and a drive mechanism from the tractor. The linear speed of the belts at the moment of impact is 20.0 m/s.

Fig. 1. Whipper for removing onion leaves in operation.

The machine qualitatively carries out the technological process in accordance with agricultural requirements. The main disadvantage is the tearing out of individual bulbs from

the ground if they are shallow (up to 5% of the total). It follows that planting the bulbs should be as deep as possible.

A prototype model of **a mounted onion digging machine** for a tractor of the 0.9-1.4-ton class KLN-1200 was developed and manufactured by VNIIO jointly with OJSC Ryazselmash. The schematic diagram of the machine is shown in Figure 2.

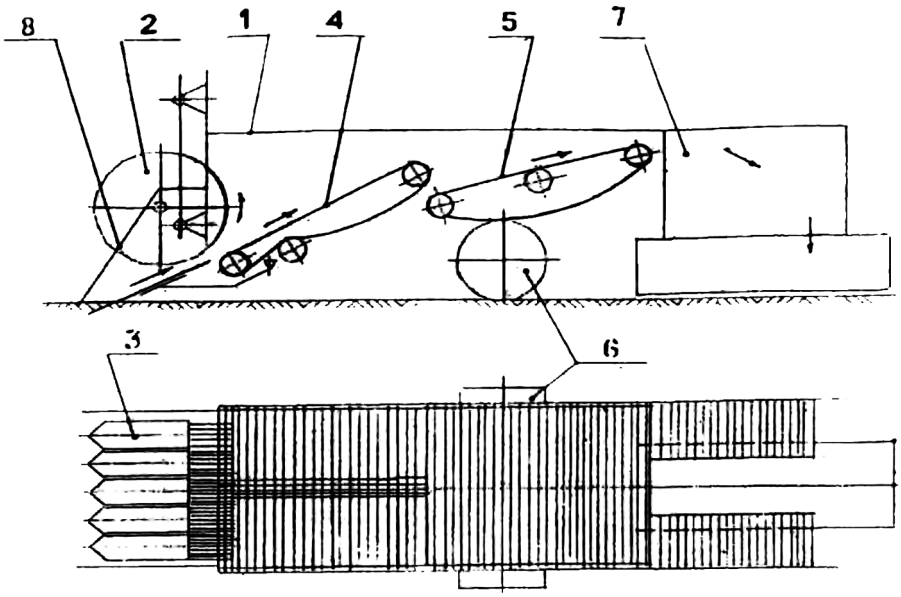

Fig. 2. Schematic diagram of the machine for harvesting onions KLN-1200: 1 – frame, 2 – four-blade beater, 3 – sectional ploughshares, 4 – main separating elevator, 5 – second separating elevator, 6 – support roller, 7 – pitched tray, 8 – lifter

When performing the technological process of harvesting the onion, the ploughshares 3 of the KLN-1200 machine cuts the layer to a depth of 10 cm and feeds the mass to the 1st elevator 4; to eliminate the mass piling up, a 4-blade beater 2 is installed above the ploughshare, which throws the excavated mass onto the elevator bed 4, where soil separation occurs. Next, the remaining mass goes to the 2nd elevator 5, where further separation occurs. The bulbs, cleared of soil, through the side pitched trays 7 are placed on the bed formed by the planning support roller 6.

We have optimized the design and kinematic parameters of the KLN-1200 machine. It should be noted that we were able to avoid disruption of the technological process at high soil moisture (up to 26.0%), which often occurs during harvesting operations. For this purpose, the sectional ploughshares are made to be minimal in area and have a curved profile with the cut soil being fed to the top of the first conveyor. In this case, the ploughshares (Figure 3) and the support roller are covered with a hydrophobic material (fluoroplastic sheet).

Fig. 3. Sectional shares covered with sheet fluoroplastic (top rear view).

4 Conclusions

In general, the implementation of the said mechanized technological operations within the established optimal parameters makes it possible to guarantee a yield of 70.0 - 80.0 tons per hectare of onions and turnips in an annual crop on alluvial meadow soils of the Non-Chernozem Zone with a standard of more than 90.0%.

References

1. Electronic resource: https://rosstat.gov. Date of application: 10/31/2023.
2. J. Khosa, R. Li, S. Joshi, M. Shaw, J. McCallum and R. McKnight, HortScience, **53 (12),** 1746 - 1749 (2018). https://doi.org/10.21273/HORTSCI13515-18
3. H. Araki and L. Huang, Acta Hortic. **1273**, 361-368 (2020). https://doi.org/10.17660/ActaHortic.2020.1273.47
4. S. Verlinden, L. McDonald, J. Kotkon and S. Childs, Hort Technology, **27 (2),** 171 – 176 (2017). https://doi.org/10.21273/HORTTECH03348-16
5. K. Snyder, A. Grant, S. Murray and B. Wolff, Hort Technology, **25 (2),** 162 – 170 (2015). https://doi.org/10.21273/HORTTECH.25.2.162
6. R.M.A. Machado and D.R. Brila, Horthy's law. **1142,** 67-74 (2016). https://doi.org/10.17660/ActaHortic.2016.1142.11
7. Shubhpriya Gupta, Wendy A. Stirk , Lenka Pla č kov á, Manoj G. Kulkarni, Karel Doležal , Johannes Van Staden, Journal of Plant Physiology, **262**, 153437, (2021). https://doi.org/10.1016/ j.jplph.2021.153437 .

8. Monique Souza, Vilmar Müller Júnior, Claudinei Kurtz, Barbara dos Santos Ventura, Cledimar Rogério Lourenzi, Cleiton Junior Ribeiro Lazzari, Guilherme Wilbert Ferreira, Gustavo Brunetto, Arcângelo Loss, Jucinei José Comin, Soil and Tillage Research, **208**, 104897 (2021). https://doi.org/10.1016/j.still.2020.104897
9. Nadezhda Golubkina, Carmine Amalfitano, Agnieszka Sekara, Alessio Tallarita, Robert Pokluda, Vasile Stoleru, Antonio Cuciniello, Alexander F. Agafonov, Andrzej Kalisz, Silvia Brîndușa Hamburdă, Gianluca Caruso, Scientia Horticulturae, **293**, 110751, (2022). https://doi.org/10.1016/j.scienta.2021.110751 .
10. M.A. Macias - Leon and D. AND. Leskovar, HortScience, **54 (1),** 60 – 69 (2019). https://doi.org/10.21273/HORTSCI13438-18
11. J. Tadić, I. Žutić, B. Urlic, M. Jukic Špika and G. Dumicic, Law on gardening, **1320**, 247-254 (2021), https://doi.org/10.17660/ActaHortic.2021.1320.32
12. A.U. Osaigbowo, K.E. Low-Ogbomo and K.N.S. Nwaoguala, Acta Hortic., **1251**, 29-36 (2019). https://doi.org/10.17660/ActaHortic.2019.1251.4
13. E. Fukukawa, S. Tanaka, Y. Kimura, and D. Yanagida, The act of gardening, **969**, 149-152 (2012). https://doi.org/10.17660/ActaHortic.2012.969.19
14. M.A. Macias-Leon and D.I. Leskovar, HortScience, **52 (12),** 1759 – 1764 (2017). https://doi.org/10.21273/HORTSCI12473-17
15. L. A. Chehade, M. Fontanelli, L. Martelloni, C. Frasconi, M. Raffaelli and A. Peruzzi, Hort Technology, **28 (4),** 502-508 (2018). https://doi.org/10.21273/HORTTECH04081-18
16. Lucía Argüelles, Hug March, Journal of Rural Studies, **101**, 103046 (2023), https://doi.org/10.1016/j.jrurstud.2023.103046.
17. Marleen Riemens, Mette Sønderskov, Anna-Camilla Moonen, Jonathan Storkey, Per Kudsk, European Journal of Agronomy, **133**, 126443, (2022). https://doi.org/10.1016/j.eja.2021.126443 .
18. Steven J. Damon, Russell L. Groves, and Michael J. Havey, Journal of the American Society for Horticultural Science, **139** (4), 495-501 (2014). https://doi.org/10.21273/JASHS.139.4.495
19. Erica Moretti, Kyle Wickings, Brian Nault, Agriculture, Ecosystems & Environment, **314**, 107420, (2021) https://doi.org/10.1016/j.agee.2021.107420
20. I. Vico, M. Lazarevic, and N. Duduk, Acta Hortic., **1325**, 67-72 (2021). https://doi.org/10.17660/ActaHortic.2021.1325.11
21. G. C. Wakchaure, P. S. Minhas, Satish Kumar, P. S. Khapte, Jagadish Rane, K. Sammi Reddy, Agricultural Water Management, **278**, 1-12, 108136, (2023). https://doi.org/10.1016/j.agwat.2023.108136 .
22. G.C. Wakchaure, P.S. Minhas, Satish Kumar, P.S. Khapte, K.K. Meena, Jagadish Rane, H. Pathak, Agricultural Water Management, **249**, 106824, (2021). https://doi.org/10.1016/j.agwat.2021.106824 .
23. A. G. Hunt, A. J. Gracie, M. Boersma, and J. Dennis, Acta Hortic., **1118**, 147-152 (2016). https://doi.org/10.17660/ActaHortic.2016.1118.21
24. B. M. Amirov, Z. S. Amirova, U. A. Manabaeva, and K. R. Zhasybaeva, Acta Hortic. **1143**, 165-170 (2016). https://doi.org/10.17660/ActaHortic.2016.1143.24
25. M.K. Bansal, G.E. Boyhan, and D.D. MacLean, Hort Technology, **28 (2),** 129 - 135 (2018). https://doi.org/10.21273/HORTTECH03903-17

26. J. Tadić, I. Žutić, B. Urlić, M. Jukić Špika, and G. Dumičić, Acta Hortic. **1320**, 247-254 (2021). https://doi.org/10.17660/ActaHortic.2021.1320.32